VEICHI

Shenzhen Veichi Electric Co., Ltd.
Address: Block C,Wentao Science and Technology Park,Shiyan Yingrenshi Community, Baoan District, Shenzhen, China
Phone:+86-755-3686 1688
Fax:+86-755-2968 5680

Suzhou Veichi Electric Co., Ltd.
Address：No.1000 Songjia road, Wuzhong Economic and Technological Development Zone, Suzhou
Phone:+86-512-6617 1988
Facebook: https://www.facebook.com/veichiglobal/
Whatsapp: +86- 138 2881 8903
E-mail:overseas@veichi.com Web:http://www.veichi.org

Wechat Official Account

Version:2018 V1.1


VEICHI

# Manual

## AC300 Series Frequency Inverter

CONTENT

Chapter 1 Overview ..... 1
1.1 Safety requirement and cautions ..... 1
1.2 Before Use ..... 1
1.3 Technical criterion ..... 2
Chapter 2 Installation ..... 4
Chapter 3 Keyboard layout and functions specification ..... 8
Chapter 4 Function Parameter Table ..... 9
4.1 Basic parameters ..... 9
4.2 Terminal of Input and Output Function Selection ..... 30
4.3 Monitor Code ..... 31
4.4 Fault Code ..... 33
Chapter 5 Periodic Overhaul and Maintenance ..... 34
5.1 Overhaul ..... 34
5.2 Maintenance ..... 35
Appendix: Modbus Communication Protocol ..... 36

# Chapter 1 Overview

## 1.1 Safety requirement and cautions

Please do totally understand this part before using the inverter.

### Warning signs and meanings

This manual has used following signs which means there is an important part of security. While observing against the rules, there is a danger of injury even death or machine system damage.

| | |
|---|---|
| Danger | Danger: Wrong operation may cause death or large accident. |
| Caution | Caution: Wrong operation may cause minor wound. |

### Operation requirement

Only professionally trained persons can be allowed to operate the equipment. “Professional trained persons “means the workers must have experience professional trained skill, and must be familiar with installation, wiring, running and maintain and can rightly deal with emergency cases in use.

### Safety guidance

Warning signs come for your security. They are measures to prevent the operator and machine system from damage. Please carefully read this manual before using and strictly observe the regulations and warning signs while operating.

- Correct transportation, store, installation, careful operation and maintenance are important for inverter safe operation. In transport and store process, make sure the inverter is free from impact and vibration. It must be stored where is dry without corrosive air and conductive dust, and the temperature must be lower than 60℃.
- This product carries dangerous voltage and controls driver machine with potential danger. If you don’t abide by the regulations or requirements in this manual, there is danger of body injury even death and machine system damage.
- Do not wire while the power is connected. Otherwise, there is danger of death for electric shock. Before wiring, inspection and maintenance, please cut off power supply of all related equipment’s and ensure main DC voltage in safe range. And please operate it after 5 mins.
- Power wire, motor wire and control wire should be all connected firmly. Earth must be reliable and earth resistance must be lower than 10Ω.
- Human body electrostatic will damage inner sensitive components seriously. Before operation, please follow ESD measures. Otherwise, there is danger of inverter damage.
- Inverter output voltage is pulse wave. If components such as capacitor which improves power factor and pressure-sensitive resistance for anti-thunder and so on are installed at the output side, please dismantle them or change to input side.
- No switch components such as breaker and contactor at the output side (If there must be one, please make sure the output current is 0 while the switch acting).
- No matter where the fault is, there is danger of serious accident. So there must be additional external prevent measures or other safety devices.
- Only used in application fields as maker stated. No use in equipments related to special fields such as emergency, succor, ship, medical treatment, aviation, nuclear and etc.
- Only Veichi Electric co., ltd service department or its authorized service center can maintain the products. It may cause product fault while using accessories not authorized or permitted. Any defective components must be changed in time in maintenance.

## 1.2 Before Use

On receiving your order, please check the package and confirm intact before opening, and check if there’s any damage, scratch or dirt (damages caused during transportation are not within the company’s warranty). If there’s any damage caused during transportation, please contact us or the transport company immediately. After confirming the receipt of the goods intact, please re-confirm if the product and your order are consistent.

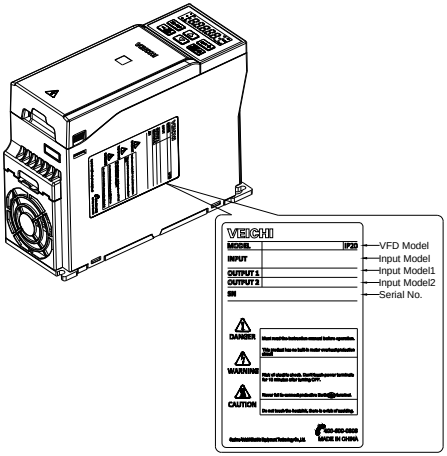


AC300 - T 3 - 011 G /015P-B

| Symbol | Product Series |
|---|---|
| AC300 | |

| Symbol | Phase |
|---|---|
| T | 3-Phase |
| S | Single Phase |

| Symbol | Voltage |
|---|---|
| 2 | 220V |
| 3 | 380V |
| 6 | 660V |
| 11 | 1140V |

| Code | Accessories type |
|---|---|
| B | Brake Unit |

| Code | VFD Type |
|---|---|
| G | General |
| P | Blower & Pump |

| Code | Adaptive motor (KW) |
|---|---|
| 7R5 | 7.5 |
| 011 | 11 |
| 018 | 18.5 |
| 132 | 132 |

| Voltage | 220V | 380V | 660V | 1140V | Voltage | 220V | 380V | 660V | 1140V |
|---|---|---|---|---|---|---|---|---|---|
| Power | Rated Output Current (A) | | | | Power | Rated Output Current (A) | | | |
| 0.75 | 4 | 3 | | | 110 | 380 | 210 | 121 | 75 |
| 1.5 | 7 | 4 | | | 132 | 420 | 250 | 150 | 86 |
| 2.2 | 10 | 6 | | | 160 | 550 | 310 | 175 | 105 |
| 4 | 16 | 10 | | | 185 | 600 | 340 | 198 | 115 |
| 5.5 | 20 | 13 | | | 200 | 660 | 380 | 218 | 132 |
| 7.5 | 30 | 17 | 10 | | 220 | 720 | 415 | 235 | 144 |
| 11 | 42 | 25 | 15 | | 250 | | 470 | 270 | 162 |
| 15 | 55 | 32 | 18 | | 280 | | 510 | 330 | 175 |
| 18.5 | 70 | 38 | 22 | | 315 | | 600 | 345 | 208 |
| 22 | 80 | 45 | 28 | | 355 | | 670 | 380 | 220 |
| 30 | 110 | 60 | 35 | | 400 | | 750 | 430 | 260 |
| 37 | 130 | 75 | 45 | 25 | 450 | | 810 | 466 | 270 |
| 45 | 160 | 90 | 52 | 31 | 500 | | 860 | 540 | 325 |
| 55 | 200 | 110 | 63 | 38 | 560 | | 990 | 600 | 365 |
| 75 | 260 | 150 | 86 | 52 | 630 | | 1100 | 680 | 400 |
| 90 | 320 | 180 | 98 | 58 | 710 | | 1260 | 760 | 450 |

## 1.3 Technical criterion

| Items | | Criterion |
|---|---|---|
| Power input | Voltage,frequency | Three phase 380V 50/60Hz , |
| | Allowable fluctuations | voltage unbalance rate:<3%; Frequency:±5%; aberration rate: as IEC61800-2 required |
| | Inrush current | Lower than rated current |
| | Power factor | ≥0.94(with DC reactor) |
| | Efficiency | ≥96% |
| Output | Output voltage | Output under rated condition: 3 phase, 0～input voltage, inaccuracy<5% |
| | Output frequency range | G type:0～600Hz |
| | Output frequency accuracy | Max frequency ±0.5% |
| | Overload capacity | G type: 150% rated current/1 min, 180% rated current/10s, 200% rated current/0.5s |
| Main Control performance | Steady speed accuracy | V/F without PG , VC without PG, V/F with PG, VC with PG |
| | Starting torque | Optimized SVPWM mode |
| | Steady speed accuracy | 0.7～16.0kHz |
| | Starting torque | VC without PG: rated load 1:100; VC with PG: rated load 1:1000 |
| | Steady speed accuracy | VC without PG: ≤2% rated synchronized speed; VC with PG: ≤0.05% rated synchronized speed |

| | | | |
|---|---|---|---|
| | Starting torque | VC without PG: when 0.5Hz, 150% rated torque; VC with PG: when 0Hz, 200% rated torque | |
| | Torque response | VC without PG: ≤20ms; VC with PG: ≤10ms | |
| | Frequency accuracy | Digit setting: max frequency×±0.01%; Analog setting: max frequency×±0.2% | |
| | Frequency resolution | Digit setting: 0.01Hz; Analog setting: max frequency×0.05% | |
| Basic functions | DC braking capacity | Starting frequency:0.00～50.00Hz; Braking time:0.0～60.0s; Braking current:0.0～150.0% rated current | |
| | Torque boost capacity | Auto torque upgrade 0.0%～100.0%; Manual torque upgrade 0.0%～30.0% | |
| | V/F curve | 4 modes: one linearity torque characteristic curve ,one self-setting V/F curve mode, one drop torque characteristic curve (1.1- 2.0 powers),and square V/F curve mode. | |
| | Acceleration/Deceleration curve | 2 modes: linear Acceleration/Deceleration and S curve Acceleration/Deceleration. 4 sets of ACC/DEC, time unit 0.01s selectable, longest time: 650.00s. | |
| | Rated output voltage | Rely on power supply voltage compensate function, while motor rated voltage is 100%, set it at the range of 50-100%(output can not over input voltage). | |
| | Voltage auto-adjustment | While power supply voltage fluctuates, it can auto-keep constant output voltage. | |
| | Auto energy-saving running | While under V/F control mode, according to load situation, auto-optimize output voltage to save energy. | |
| | Auto-limit current | Auto-limit the current while running to prevent over current break trouble. | |
| | Instant power off treatment | While instant power off, realize continual operation by bus voltage control. | |
| | Standard functions | PID control, speed track, power off restart, jump frequency, upper/lower frequency limit control, program operation, multi- speed, RS485, analog output, frequency impulse output. | |
| | Frequency setting channels | Keyboard digital setting, Analog voltage/current terminal AI1, Analog voltage/current terminal AI2, Communication given and multi-channel terminal selection, Main and auxiliary channel combination, expansion card, supporting different modes switch | |
| | Feedback input channel | Voltage/Current Terminal AI1, Voltage/Current Terminal AI12, Communication given, Low-speed pulse input PUL, extension card | |
| | Running command channel | Operation panel given, external terminal given, communication given, expansion card given | |
| | Input command signal | Start, stop, FWD/REV, JOG, multi-step speed, free stop, reset, ACC/DEC time selection, frequency given channel selection, exterior fault alarm. | |
| | Exterior output signal | 1 relay output, 1 collector output, 1 AO output: 0～10V output or 4～20mA output, or frequency pulse output | |
| Protection function | | Overvoltage, under-voltage, current limit, over-current, overload, electric thermal relay, overheat, overvoltage stall, data protection, rapid speed protection, input/output phase failure protection | |
| Keyboard display | LED display | Single file 5 digital tube display | Can monitor one state variable |
| | | Two file 5 digital tube display | Can monitor two state variables |
| | Parameter copy | Can upload or download function code information of inverter to realize fast parameter copy. | |
| | State monitor | Output frequency, given frequency, output current, input voltage, output voltage, motor speed, PID feedback, PID given value, module temperature etc. monitor parameters. | |
| | Fault alarm | ,Over-voltage, under-voltage, over-current, short circuit, phase failure, overload, overheat, overvoltage stall, current limit, or data protection destroyed; Fault running state; Fault history. | |
| Environment | Install place | altitude ≤ 1000m,above 1000m down the rated amount, each increase of 100m down the rated amount of 1%;no condensation, ice ,rain, snow, hail; solar radiation below 700W/㎡, air pressure 70-106 kPa | |
| | Temperature, humidity | -10~+50℃, above 40℃ down the rated amount, the max temperature:60℃ (no load running) | |
| | Vibration | 9～200Hz,5.9m/s2(0.6g) | |
| | Store temperature | -30—+60℃ | |
| | Installation | Hanging type, cabinet type | |
| | Protection degree | IP20 | |
| | Cooling mode | Forced air cooling | |

# Chapter 2 Installation

This section specifies the considerations necessary for reliable and safe operation of the product by users.

Overall Dimension of Inverter (Plastic)

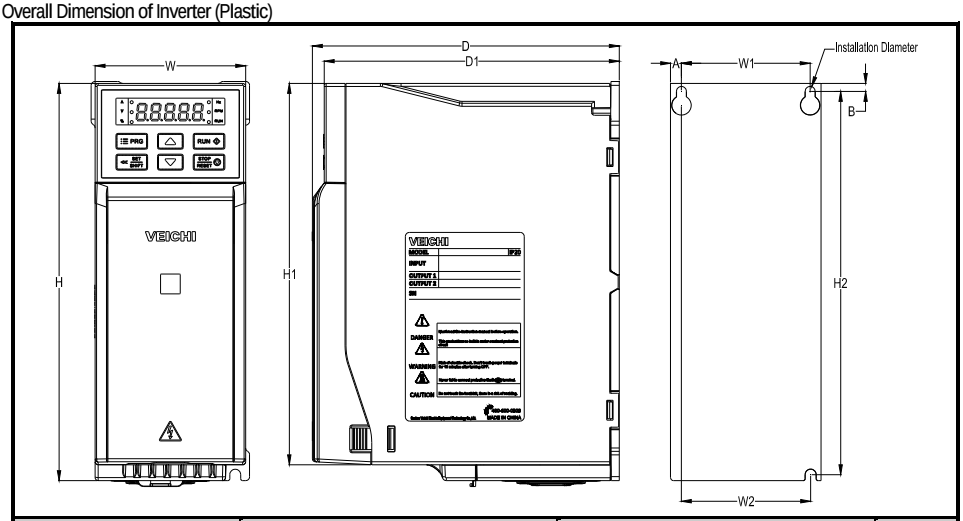


| MODEL | Overall Dimension(mm) | | | | | Installation Dimension(mm) | | | | | Aperture |
|---|---|---|---|---|---|---|---|---|---|---|---|
| | W | H | H1 | D | D1 | W1 | W2 | H2 | A | B | |
| AC300-T3-R75G/1R5P-B | 76 | 200 | 192 | 155 | 149 | 65 | 65 | 193 | 5.5 | 4 | φ3-M4 |
| AC300-T3-1R5G/2R2P-B | | | | | | | | | | | |
| AC300-T3-2R2G-B | | | | | | | | | | | |
| AC300-T3-004G/5R5P-B | 100 | 242 | 231 | 155 | 149 | 84 | 86.5 | 231.5 | 8 | 5.5 | φ3-M4 |
| AC300-T3-5R5G/7R5P-B | | | | | | | | | | | |
| AC300-T3-7R5G/011P-B | 116 | 290 | 277.5 | 175 | 169 | 98 | 100 | 277.5 | 9 | 6 | φ3-M5 |
| AC300-T3-011G/015P-B | | | | | | | | | | | |
| AC300-T3-015G/018P-B | 140 | 360 | 349.5 | 225 | 219 | 120 | 120 | 350 | 10 | 6 | φ4-M5 |
| AC300-T3-018G/022P-B | | | | | | | | | | | |
| AC300-T3-022G/030P-B | | | | | | | | | | | |
| AC300-T3-030G/037P | 172 | 430 | / | 225 | 219 | 150 | 150 | 416 | 11 | 7.5 | φ4-M5 |
| AC300-T3-037G/045P | | | | | | | | | | | |

Overall Dimension of Inverter (Steel)

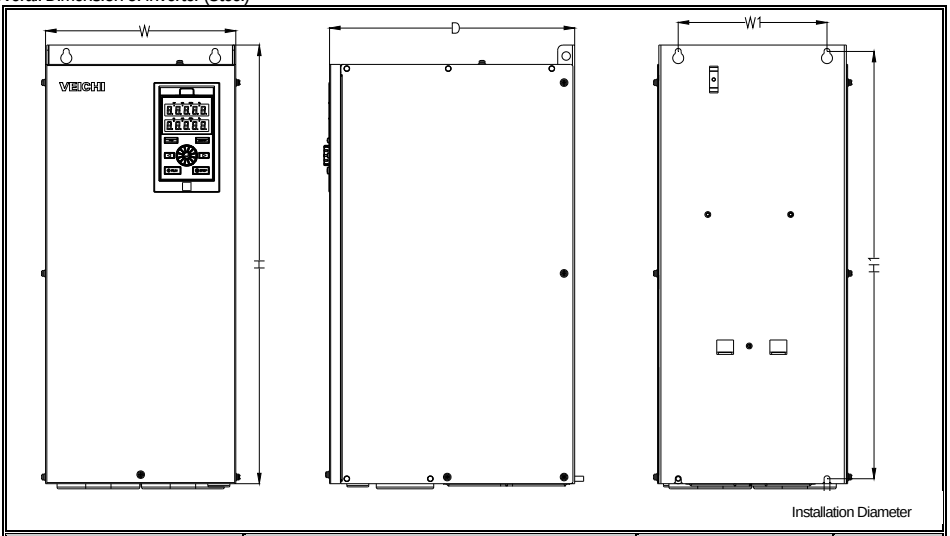


| MODEL | Overall Dimension(mm) | | | | Installation | | Aperture |
|---|---|---|---|---|---|---|---|
| | W | H | D | H2 | W1 | H1 | |
| AC300-T3-045G/055P | 225 | 523 | 290 | 500 | 176 | 509 | ϕ7 |
| AC300-T3-055G/075P | 225 | 523 | 290 | 500 | 176 | 509 | ϕ7 |
| AC300-T3-075G/090P | 240 | 570 | 340 | 535 | 176 | 551 | ϕ9 |

## Standard Connection Diagram

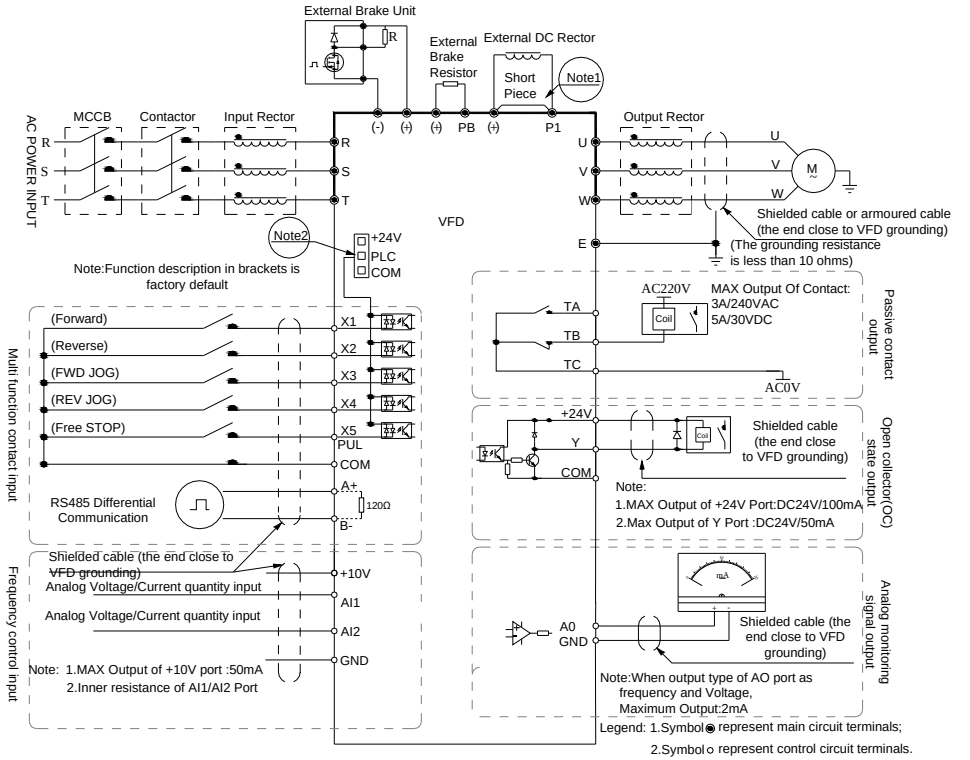


Note: 1.When installing DC reactor, make sure to dismantle the short connector between terminal P1 and (+).

2. NPN or PNP transistor signal can be selected as input of multi-function input terminal (X1~X5/PUL) . Inverter built-in power supply (+24V terminal) or external power supply (PLC terminal) can be chosen as bias voltage. Factory setting '+24V' short connect with 'PLC', which locates between RJ45 and terminals.

3. Analog monitor output is the special output for meters such as frequency meter, current meter and voltage meter. It can't be used for control operations such as feedback control.

4. As there are multi pulse styles, please refer to the line connect mode description details.

● Auxiliary Terminal Output Capacity

| Terminal | Function Definition | Max Output |
|---|---|---|
| +10V | 10V auxiliary power supply output, constitutes loop with GND. | 50mA |
| A0 | Analog monitor output, constitutes loop with GND. | Max output 2mA as frequency, voltage signal |
| +24V | 24V auxiliary power supply output, constitutes loop with COM. | 100mA |
| Y | Collector open circuit output; can set the action-object by program. | DC24V/50mA |
| TA/TB/TC | Passive connector output; can set the action-object by program. | 3A/240VAC |

● Function Specification of Switch Terminals

| Switch Terminal | Selecting Position | Function Specification |
|---|---|---|
| RS485 OFF ON<br>AO-F OFF ON<br>AO-I OFF ON<br>AO-U OFF ON<br>AI1 U I<br>AI2 U I | RS485 Terminal Resistor | RS485 Communication :connect with 120Ω terminal resistor |
| | AO Output- frequency | AO2: 0.0～100kHz frequency output |
| | AO Output- Current | AO2: 0～20mA current output or 4～20mA current output |
| | AO Output- Voltage | 0～10V voltage output |
| | AI1 Input- Current/Voltage | AI1: Input 0～20mA or 0～10V |
| | AI2 Input- Current/Voltage | AI2: Input 0～20mA or 0～10V |

● Multi-function input point connection

PNP transistor connection mode

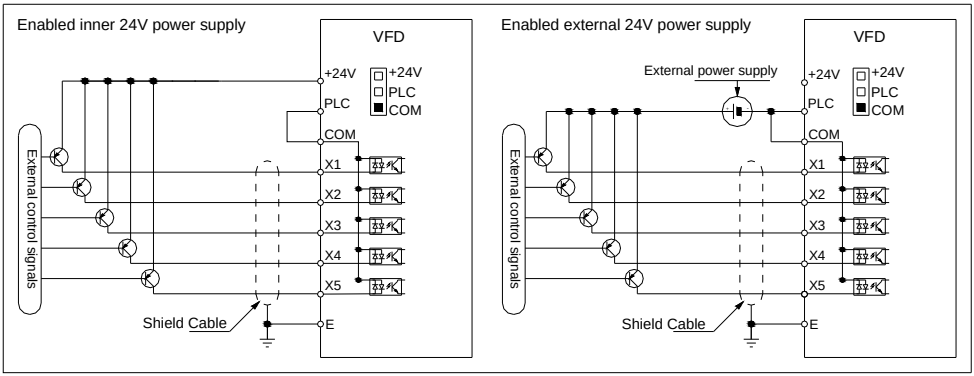


NPN transistor connection mode

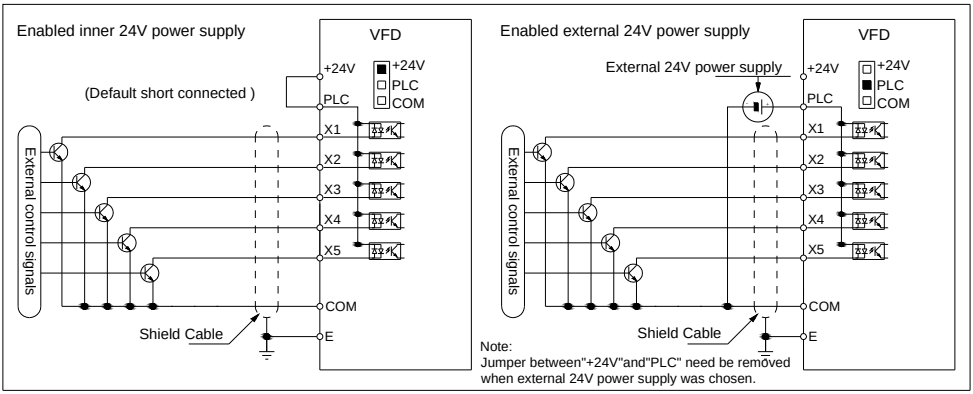

# Chapter 3 Keyboard layout and functions specification

●Keyboard Appearance


●Key function

| Key | Name | Function |
|---|---|---|
| PRG | Menu key | Enter menu while standby or running. Presses this key to return while modify parameter. While standby or running, press for 1 sec to enter condition monitoring interface. |
| SET SHIFT | Confirm/Shift key | Press to modify parameter while in menu interface. Press again to confirm after modifying; Press this key for 1 Sec to shift digit, and long press to cycle. Each digit flashes three time to shift to next digit. |
| | Up/down key | Select parameter group in menu interface. Modify parameter in modify state. Modify given frequency, ID given while at standby or monitoring state (While given frequency, PID are set by keyboard and [F4.09] needs to be set. |
| RUN | Run key | While run/stop is controlled by keyboard, press this key, inverter forward runs, and the indicator is always on. While reverse, the indicator sparks. |
| STOP RESET | Stop/reset key | Machine stops if press it while run/stop is controlled by keyboard. Its efficiency range is defined by [F4.08]. Inverter resets if press it in fault state (no reset if fault is not solved). |

●Indicator Definition

| Name | | State | Meaning |
|---|---|---|---|
| Unit indicator light | Hz | Flash / On | Frequency unit |
| | A | On | Current unit |
| | V | On | Voltage unit |
| | RPM | On | Motor speed unit |
| | % | Flash / On | Percent unit |
| State indicator light | RUN | On | Forward running |
| | RUN | Flash | Reverse running |
| | RUN | Off | Stop |

# Chapter 4 Function Parameter Table

This chapter just provides function parameter table. Specifications refer to AC200 technical manual or inquiry the company.

"●": Parameter can be changed in the running state.

"○": Parameter can't be changed in the running state.

"×": Parameter can be read only.

"–": Factory setting parameter, only factory can set.

"※": Parameter is related to the model.

## 4.1 Basic parameters

| NO. | Function description | Range of settings and definition | Factory default | Feature | Address |
|---|---|---|---|---|---|
| F00.00 | Motor control mode | Asynchronous motor control mode:<br>0: V/F control<br>3: High-performance VC without PG<br>4: High-performance VC with PG<br>Synchronous motor control mode:<br>6: High-performance VC without PG<br>7: VC with PG<br>Other control:<br>8:Voltage frequency separation output<br>1/2/5: Reserved | 0 | ○ | 0x000 |
| F00.01 | Reserved | | | | 0x001 |
| F00.02 | Run command channel | 0: Keyboard control<br>1: Terminal control<br>2: RS485 communication control<br>3: Reserved | 0 | ● | 0x002 |
| F00.03 | Frequency given source channel A | 0: Keyboard number given<br>1: Reserved<br>2: Voltage/Current analog AI1 given<br>3: Voltage/Current analog AI2 given<br>4: Reserved<br>5: Terminal pulse PUL given<br>6: RS485 communication given<br>7: Terminal UP/DW control<br>8: PID control given<br>9: Program control (PLC) given<br>10: Optional card<br>11: Multi-steps speed given | 0 | ● | 0x003 |
| F00.04 | Frequency given source channel B | | 1 | ● | 0x004 |
| F00.05 | Frequency channel B reference source | 0: Max. output frequency as reference source<br>1: Set frequency of channel A as reference source | 0 | ● | 0x005 |
| F00.06 | Frequency given source selection | 0: Channel A<br>1: Channel B<br>2: Channel A+Channel B<br>3: Channel A-Channel B<br>4: Max. value of Channel A and Channel B<br>5: Min. value of Channel A and Channel B | 0 | ● | 0x006 |
| F00.07 | Running Command Binding | LED"0"digit: keyboard command instruction binding<br>LED"00"digit: terminal command instruction binding<br>LED"000"digit: communication command instruction binding<br>LED"0000"digit: optional card command instruction binding<br>0 : no binding<br>1 : keyboard number given frequency | 0000 | ● | 0x007 |

| | | | | | |
|---|---|---|---|---|---|
| | | 2 : Reserved<br>3 : Voltage/Current analog AI1 given<br>4 : Voltage/Current analog AI2 given<br>5 : Reserved<br>6 : Terminal pulse PUL given<br>7: RS485 communication given<br>8 : Terminal UP/DW control<br>9 : PID control given<br>A: Program control (PLC) given<br>B: Optional card<br>C: Multi-steps speed given | | | |
| F00.08 | Keyboard digital setting frequency | 0～upper limit | 50.00Hz | ● | 0x008 |
| F00.09 | Max frequency output | upper limit～600.00Hz | 50.00Hz | ○ | 0x009 |
| F00.10 | Upper limit frequency source selection | 0: Upper limit frequency digital given<br>1: Reserved<br>2: Voltage/Current analog AI1 give<br>3: Voltage/Current analog AI2 given<br>4: Reserved<br>5: Terminal pulse PUL given<br>6: RS485 communication given<br>7: Optional card | 0 | ● | 0x00A |
| F00.11 | Upper frequency limit digital setting | Lower limit frequency～max frequency | 50.00Hz | ● | 0x00B |
| F00.12 | Lower limit frequency | 0.00～upper limit frequency | 0.00Hz | ● | 0x00C |
| F00.13 | Lower limit frequency running mode | 0: Stop output, enter into pause running state<br>1: Run at lower limit frequency | 1 | ○ | 0x00D |
| F00.14 | ACC time 1 | 0.01～650.00s | Model set | ※ | 0x00E |
| F00.15 | DEC time 1 | 0.01～650.00s | Model set | ※ | 0x00F |
| F00.16 | Rotary direction selection | LED“0”digit: running direction takes the opposite<br>0: Direction unchanged<br>1: Direction takes the opposite<br>LED“00”digit: running direction prohibited<br>0:Forward and reverse commands are allowed<br>1: Only FWD command allowed<br>2: Only REV command allowed<br>LED“000”digit: frequency control direction selection<br>0: Invalid 1: Valid<br>LED“0000”digit: reserved | 0000 | ○ | 0x010 |
| F00.17 | G/P Model Setting | 0:G Type 1:P Type | 0 | ● | 0x011 |
| F00.18 | Reserved | | | | 0x012 |
| F00.19 | Parameter initialization | 0: No action<br>1: Restore factory default (not restoring motor parameters)<br>2: Restore factory default (restoring motor parameters)<br>3: Clear malfunction records | 0 | ○ | 0x013 |

Operation Control Parameters Group

| NO. | Function description | Range of settings and definition | Factory setting | Feature | Address |
|---|---|---|---|---|---|
| F01.00 | Start-up running mode | 0: Start by start-up frequency<br>1: DC Braking at first then start by start-up frequency<br>2: Speed tracking, and judge the direction then start | 0 | ○ | 0x100 |
| F01.01 | Start pre-excitation time | 0.00～60.00s | 0.00s | ○ | 0x101 |
| F01.02 | Start-up frequency | 0.00～60.00Hz | 0.50Hz | ○ | 0x102 |
| F01.03 | Start-up frequency holding time | 0.0～50.0s | 0.0s | ○ | 0x103 |
| F01.04 | Braking current before start | 0.0～150.0% | 60.0% | ○ | 0x104 |
| F01.05 | Braking time before start | 0.0～60.0s | 0.0s | ○ | 0x105 |
| F01.06 | Speed tracking time | 0.00～60.00s | 0.50s | ○ | 0x106 |
| F01.07 | Speed tracking delay when stop | 0.00～60.00s | 1.00s | ○ | 0x107 |
| F01.08 | Reserved | | | | |
| F01.09 | Reserved | | | | |
| F01.10 | Stop mode | 0:DEC stop　1:Free stop | 0 | ● | 0x10A |
| F01.11 | DC braking initial frequency when stop | 0.00～50.00Hz | 1.00Hz | ○ | 0x10B |
| F01.12 | DC braking current when stop | 0.0～150.0% | 60.0% | | 0x10C |
| F01.13 | Reserved | | | | 0x10D |
| F01.14 | DC braking hold time when stop | 0.0～60.0s | 0.0s | ○ | 0x10E |
| F01.15 | Stop detection frequency | 0.00～50.00Hz | 0.50Hz | ● | 0x10F |
| F01.16 | ACC/DEC selection | LED “0” digit: time base selection<br>0: max frequency<br>1: fixed frequency 50Hz<br>2: set frequency<br>LED“00”digit: S ACC/DEC selection<br>0: Beeline ACC/DEC<br>1: S Curve ACC/DEC<br>LED “000” digit: reserved<br>LED “0000” digit: reserved | 0010 | ○ | 0x110 |
| F01.17 | ACC start time for S curve | 0.00～10.00 | 0.20s | ○ | 0x111 |
| F01.18 | ACC end time for S curve | 0.00～10.00 | 0.20s | ○ | 0x112 |
| F01.19 | DEC start time for S curve | 0.00～10.00 | 0.20s | ○ | 0x113 |
| F01.20 | DEC end time for S curve | 0.00～10.00 | 0.20s | ○ | 0x114 |
| F01.21 | ACC time 2 | 0.01～650.00s | 10.00s | ● | 0x115 |
| F01.22 | DEC time 2 | 0.01～650.00s | 10.00s | ● | 0x116 |
| F01.23 | ACC time 3 | 0.01～650.00s | 10.00s | ● | 0x117 |
| F01.24 | DEC time 3 | 0.01～650.00s | 10.00s | ● | 0x118 |
| F01.25 | ACC time 4 | 0.01～650.00s | 10.00s | ● | 0x119 |
| F01.26 | DEC time 4 | 0.01～650.00s | 10.00s | ● | 0x11A |
| F01.27 | DEC time at emergency stop | 0.01～650.00s | 1.00s | ● | 0x11B |
| F01.28 | FWD&REV dead time | 0.0～120.0s | 0.0s | ○ | 0x11C |
| F01.29 | Zero speed torque frequency threshold | 0.00～10.00Hz | 0.50Hz | ● | 0x11D |
| F01.30 | Zero speed torque coefficient | 0.0～150.0% | 60.0% | ● | 0x11E |

| | | | | | | |
|---|---|---|---|---|---|---|
| F01.31 | Zero speed torque holding time | 0.0～6000.0s<br>If set 6000.0S,always hold without time limit | | 0 | ● | 0x11F |
| F01.32-<br>F01.34 | Reserved | | | | | |
| F01.35 | Power off restart action selection | 0:Invalid | 1:Valid | 0 | ○ | 0x123 |
| F01.36 | Power off restart waiting time | 0.00～60.00s | | 0.50s | ○ | 0x124 |
| F01.37 | Reserved | | | | | 0x125 |
| F01.38 | JOG running frequency setting | 0.00-Max frequency | | 5.00Hz | ● | 0x126 |
| F01.39 | JOG ACC time | 0.01～650.00s | | 10.00s | ● | 0x127 |
| F01.40 | JOG DEC time | 0.01～650.00s | | 10.00s | ● | 0x128 |
| F01.41 | Jump frequency 1 | 0.00～Max frequency | | 0.00Hz | ● | 0x129 |
| F01.42 | Jump frequency range 1 | 0.00～Max frequency | | 0.00Hz | ● | 0x12A |
| F01.43 | Jump frequency 2 | 0.00～Max frequency | | 0.00Hz | ● | 0x12B |
| F01.44 | Jump frequency range 2 | 0.00～Max frequency | | 0.00Hz | ● | 0x12C |

Switching value terminal parameters

| NO. | Function description | Range of setting and definition | Factory setting | Feature | Address |
|---|---|---|---|---|---|
| F02.00 | Input terminal 1(X1) | Refer to function table 4.2 | 1 | ○ | 0x200 |
| F02.01 | Input terminal 2(X2) | Refer to function table 4.2 | 2 | ○ | 0x201 |
| F02.02 | Input terminal 3(X3) | Refer to function table 4.2 | 4 | ○ | 0x202 |
| F02.03 | Input terminal 4(X4) | Refer to function table 4.2 | 5 | ○ | 0x203 |
| F02.04 | Input terminal 5(X5) | Refer to function table 4.2 | 6 | ○ | 0x204 |
| F02.05 | Input terminal 6(X6 expand) | Refer to function table 4.2 | 0 | ○ | 0x205 |
| F02.06 | Input terminal 7(X7 expand) | Refer to function table 4.2 | 0 | ○ | 0x206 |
| F02.07 | Input terminal 8(X8 expand) | Refer to function table 4.2 | 0 | ○ | 0x207 |
| F02.08 | Input terminal 9(X9 expand) | Refer to function table 4.2 | 0 | ○ | 0x208 |
| F02.09 | Input terminal 10(X10 expand) | Refer to function table 4.2 | 0 | ○ | 0x209 |
| F02.10 | X1～X4 terminal trait selection | 0: On valid 1: Off valid<br>LED “0” digit: X1<br>LED “00” digit: X2<br>LED “000” digit: X3<br>LED “0000” digit: X4 | 0000 | ● | 0x20A |
| F02.11 | X5～X8 terminal trait selection | 0: On valid 1: Off valid<br>LED “0” digit: X5<br>LED “00” digit: X6<br>LED “000” digit: X7<br>LED “0000” digit: X8 | 0000 | ● | 0x20B |
| F02.12 | X9～X10 terminal trait selection | 0: On valid 1: Off valid<br>LED “0” digit: X9<br>LED “00” digit: X10<br>LED “000” digit: Reserved<br>LED “0000” digit: Reserved | 0000 | ● | 0x20C |
| F02.13 | X1 valid detection delay | 0.000～6.000s | 0.010 | ● | 0x20D |
| F02.14 | X1 invalid detection delay | 0.000～6.000s | 0.010 | ● | 0x20E |
| F02.15 | X2 valid detection delay | 0.000～6.000s | 0.010 | ● | 0x20F |
| F02.16 | X2 invalid detection delay | 0.000～6.000s | 0.010 | ● | 0x210 |
| F02.17 | X3 valid detection delay | 0.000～6.000s | 0.010 | ● | 0x211 |
| F02.18 | X3 invalid detection delay | 0.000～6.000s | 0.010 | ● | 0x212 |

| | | | | | |
|---|---|---|---|---|---|
| F02.19 | X4 valid detection delay | 0.000～6.000s | 0.010 | ● | 0x213 |
| F02.20 | X4 invalid detection delay | 0.000～6.000s | 0.010 | ● | 0x214 |
| F02.21 | X5 valid detection delay | 0.000～6.000s | 0.010 | ● | 0x215 |
| F02.22 | X5 invalid detection delay | 0.000～6.000s | 0.010 | ● | 0x216 |
| F02.23 | Terminal control running mode | 0: 2-line 1<br>1: 2-line 2<br>2: 3-line 1<br>3: 3-line 2 | 0 | ○ | 0x217 |
| F02.24 | Terminal operate protection | 0: OFF 1:ON<br>LED "0" digit: Terminal operate protection when abnormal exit<br>LED "00" digit: Jog terminal operate protection when abnormal exit<br>LED "000" digit: Operate protection when command channel switch to terminal | 0111 | ○ | 0x218 |
| F02.25 | Counter input | 0: Common X terminal<br>1: High speed input terminal PUL<br>2: PG card counting | 0 | ● | 0x219 |
| F02.26 | Count input frequency division | 0～6000 | 0 | ● | 0x21A |
| F02.27 | PUL signal source | 0: X5(max～5 KHz)<br>1: Extend interface X10 | 0 | ○ | 0x21B |
| F02.28 | PUL input min frequency | 0.00～50.00 KHz | 0.00kHz | ● | 0x21C |
| F02.29 | PUL min frequency corresponding setting | 0.00～100.00% | 0.00% | ● | 0x21D |
| F02.30 | PUL input max frequency | 0.00～50.00 KHz | 50.00kHz | ● | 0x21E |
| F02.31 | PUL max frequency corresponding setting | 0.00～100.00% | 100.00% | ● | 0x21F |
| F02.32 | PUL filter time | 0.000～9.000s | 0.100s | ● | 0x220 |
| F02.33 | PUL cut-off frequency | 0.000～1.000 KHz | 0.010kHz | ● | 0x221 |
| F02.34 | UP/DW terminal control mode | 0: Off electricity storage<br>1: Off electricity does not storage<br>2: Valid in running, clear zero at stop | 0 | ○ | 0x222 |
| F02.35 | ACC/DEC speed of UP/DW terminal frequency control | 0.01～50.00Hz/s | 0.50Hz/s | ● | 0x223 |
| F02.36 | Reserved | | | | 0x224 |
| F02.37 | Timer time unit | 0:Second 1:Minute 2:Hour | 0 | ● | 0x225 |
| F02.38 | Timer setting value | 0～65000 | 0 | ● | 0x226 |
| F02.39 | Counter max value | 0～65000 | 1000 | ● | 0x227 |
| F02.40 | Counter setting value | 0～65000 | 500 | ● | 0x228 |
| F02.41 | Reserved | | | | 0x229 |
| F02.42 | Output terminal polarity selection | 0: Positive 1: Negative<br>LED "0" digit: Terminal Y<br>LED "00" digit: Relay output 1<br>LED "000" digit: Extended Y1 terminal<br>LED "0000" digit: Extended Relay output 2 | 0000 | ● | 0x22A |
| F02.43 | Output terminal Y1 | Refer to function table 4.2 | 1 | ● | 0x22B |
| F02.44 | Extend terminal Y1 | Refer to function table 4.2 | | | 0x22C |

| | | | | | |
|---|---|---|---|---|---|
| F02.45 | Relay output | Refer to function table 4.2 | 4 | ● | 0x22D |
| F02.46 | Extend relay output 2 | Refer to function table 4.2 | | | 0x22E |
| F02.47 | Y output delay time | 0.000～6.000s | 0.010s | ● | 0x22F |
| F02.48 | Extend Y output delay output | 0.000～6.000s | 0.010s | ● | 0x230 |
| F02.49 | Relay 1 output delay time | 0.000～6.000s | 0.010s | ● | 0x231 |
| F02.50 | Extend relay 2 output delay time | 0.000～6.000s | 0.010s | ● | 0x232 |
| F02.51 | Output frequency level 1(FDT1) | 0.00～Max. frequency | 30.00Hz | ● | 0x233 |
| F02.52 | FDT1 lag | 0.00～Max. frequency | 1.00Hz | ● | 0x234 |
| F02.53 | Output frequency level 2(FDT2) | 0.00～Max. frequency | 50.00Hz | ● | 0x235 |
| F02.54 | FDT2 lag | 0.00～Max. frequency | 1.00Hz | ● | 0x236 |
| F02.55 | Given frequency arriving checkout range | 0.00～50.00Hz | 2.00Hz | ● | 0x237 |
| F02.60 | Virtual vX1 terminal function selection | Refer to function table 4.2 | 0 | ● | 0x238 |
| F02.61 | Virtual vX2 terminal function selection | Refer to function table 4.2 | 0 | ● | 0x239 |
| F02.62 | Virtual vX3 terminal function selection | Refer to function table 4.2 | 0 | ● | 0x23A |
| F02.63 | Virtual vX4 terminal function selection | Refer to function table 4.2 | 0 | ● | 0x23B |
| F02.64 | vX terminal valid state source | 0: internal connection with virtual vYn<br>1: Connect with physical terminal Xn<br>2: function code setting valid or not<br>LED “0” digit: virtual vX1<br>LED “00” digit: virtual vX2<br>LED “000” digit: virtual vX3<br>LED “0000” digit: virtual vX4 | 0 | ● | 0x23C |
| F02.65 | Virtual vX terminal function code setting valid state | 0: invalid 1: valid<br>LED “0” digit: virtual vX1<br>LED “00” digit: virtual vX2<br>LED “000” digit: virtual vX3<br>LED “0000” digit: virtual vX4 | 0 | ● | 0x23D |
| F02.66 | Virtual vY1 terminal function selection | Refer to function table 4.2 | 0 | ● | 0x23E |
| F02.67 | Virtual vY2 terminal function selection | Refer to function table 4.2 | 0 | ● | 0x23F |
| F02.68 | Virtual vY3 terminal function selection | Refer to function table 4.2 | 0 | ● | 0x240 |
| F02.69 | Virtual vY4 terminal function selection | Refer to function table 4.2 | 0 | ● | 0x241 |
| F02.70 | vY1 output delay | 0.000～6.000s | 0.010 | ● | 0x242 |
| F02.71 | vY2 output delay | 0.000～6.000s | 0.010 | ● | 0x243 |
| F02.72 | vY3 output delay | 0.000～6.000s | 0.010 | ● | 0x244 |
| F02.73 | Virtual vY2 output selection | 0.000～6.000s | 0.010 | ● | 0x245 |

Analog Terminal Parameters

| NO. | Function description | Range of settings and definition | Factory setting | Feature | Address |
|---|---|---|---|---|---|
| F03.00 | AI1 Lower limit | 0.00～10.00V | 0.00V | ● | 0x300 |
| F03.01 | AI1 Lower limit corresponding setting | -100.00～100.00% | 0.00% | ● | 0x301 |
| F03.02 | AI1 upper limit | 0.00～10.00V | 10.00V | ● | 0x302 |
| F03.03 | AI1 upper limit corresponding setting | -100.00～100.00% | 100.00% | ● | 0x303 |
| F03.04 | AI1 filter time | 0.000～6.000s | 0.010s | ● | 0x304 |
| F03.05 | AI1 zero point loop voltage | 0.00～10.00V | 0.00V | ● | 0x305 |
| F03.06 | AI2 Lower limit | 0.00～10.00V | 0.00V | ● | 0x306 |
| F03.07 | AI2 Lower limit corresponding setting | 0.00～100.00% | 0.00% | ● | 0x307 |
| F03.08 | AI2 upper limit | 0.00～10.00V | 10.00V | ● | 0x308 |
| F03.09 | AI2 upper limit corresponding setting | 0.00～100.00% | 100.00% | ● | 0x309 |
| F03.10 | AI2 filter time | 0.000～6.000s | 0.010s | ● | 0x30A |
| F03.11 | AI2 zero point loop voltage | 0.00～10.00V | 0.00V | ● | 0x30B |
| F03.12 | AI1 function selection | See X terminal function | 0 | ○ | 0x30C |
| F03.13 | AI1 high level setting | 0.00～100.00% | 70.00% | ● | 0x30D |
| F03.14 | AI1 low level setting | 0.00～100.00% | 30.00% | ● | 0x30E |
| F03.15 | AI2 function selection | See X terminal function | 0 | ○ | 0x30F |
| F03.16 | AI2 high level setting | 0.00～100.00% | 70.00% | ● | 0x310 |
| F03.17 | AI2 low level setting | 0.00～100.00% | 30.00% | ● | 0x311 |
| F03.18 | Valid state setting when analog used as terminal | 0: low level 1: high level<br>LED “0” digit: AI1<br>LED “00” digit: AI2<br>LED “000” digit: reserved<br>LED “0000” digit: reserved | 0000 | ● | 0x312 |
| F03.19 | Analog input curve selection | LED “0” digit: AI1<br>0: Beeline (default) 1: curve 1 2: curve 2<br>LED “00” digit: AI2 (Select voltage or current input by wire jumper)<br>LED “000” digit: reserved<br>LED “0000”digit: reserved | 0000 | ● | 0x313 |
| F03.20 | Reserved | | | | 0x314 |
| F03.21 | Curve 1 lower limit | 0.00～10.00V | 0.00V | ● | 0x315 |
| F03.22 | Curve 1 lower limit corresponding setting | 0.00～100.00% | 0.0% | ● | 0x316 |
| F03.23 | Curve 1 inflection point 1 input voltage | 0.00～10.00V | 3.00V | ● | 0x317 |
| F03.24 | Curve 1 inflection point 1 corresponding setting | 0.00～100.00% | 30.00% | ● | 0x318 |
| F03.25 | Curve 1 inflection point 2 input voltage | 0.00～10.00V | 6.00V | ● | 0x319 |

| | | | | | |
|---|---|---|---|---|---|
| F03.26 | Curve 1 inflection point 2 corresponding setting | 0.00～100.00% | 60.00% | ● | 0x31A |
| F03.27 | Curve 1 upper limit | 0.00～10.00V | 10.0V | ● | 0x31B |
| F03.28 | Curve 1 upper limit corresponding setting | 0.00～100.00% | 100.00% | ● | 0x31C |
| F03.29 | Curve 2 lower limit | 0.00～10.00V | 0.00V | ● | 0x31D |
| F03.30 | Curve 2 lower limit corresponding setting | 0.00～100.00% | 0.00% | ● | 0x31E |
| F03.31 | Curve 2 inflection point 1 input voltage | 0.00～10.00V | 3.00V | ● | 0x31F |
| F03.32 | Curve 2 inflection point 1 corresponding setting | 0.00～100.00% | 30.00% | ● | 0x320 |
| F03.33 | Curve 2 inflection point 2 input voltage | 0.00～10.00V | 6.00V | ● | 0x321 |
| F03.34 | Curve 2 inflection point 2 corresponding setting | 0.00～100.00% | 60.00% | ● | 0x322 |
| F03.35 | Curve 2 upper limit | 0.00～10.00V | 10.00V | ● | 0x323 |
| F03.36 | Curve 2 upper limit corresponding setting | 0.00～100.00% | 100.00% | ● | 0x324 |
| F03.37 | A0 output signal selection | LED “0” digit: AO1<br>0: 0～10V<br>1: 4.00～20.00mA<br>2: 0.00～20.00mA<br>3: FM frequency pulse output<br>LED “00” digit: A02 extended card<br>0: 0～10V<br>1: 4.00～20.00mA<br>2: 0.00～20.00mA<br>LED “000” digit: reserved<br>LED 0000 digit: reserved | 0000 | ● | 0x325 |
| F03.38 | A01 output selection | 0:Given frequency<br>1:Output frequency<br>2:Output current<br>3:Input voltage<br>4:Output voltage<br>5:Machine speed<br>6:Given torque<br>7:Output torque<br>8:PID given value<br>9:PID feedback value 10:Output power<br>11:Bus voltage<br>12:AI1<br>13:AI2<br>14:Reserved<br>15:PUL<br>16,17:IGBT temperature 1,2<br>18:RS485 given | 0 | ● | 0x326 |
| F03.39 | A02 extended output selection | | 1 | ● | 0x327 |
| F03.40 | A01 output gain | 25.0～200.0% | 100.0% | ● | 0x328 |
| F03.41 | A01 analog output signal bias | -10.0%～10.0% | 0.0% | ● | 0x329 |

| | | | | | |
|---|---|---|---|---|---|
| F03.42 | A01 output filter | 0.000～6.000s | 0.010s | ● | 0x32A |
| F03.43 | A01 FM frequency output lower limit | 0.00～100.00kHz | 0.20kHz | ● | 0x32B |
| F03.44 | A02FM frequency output upper limit | 0.00～100.00kHz | 50.00kHz | ● | 0x32C |
| F03.45 | AO2 extend output gain | 25.0～200.0% | 100.0% | ● | 0x32D |
| F03.46 | A02 extend analog output signal bias | -10.0%～10.0% | 0.0% | ● | 0x32E |
| F03.47 | A02 extend output filter | 0.000～6.000s | 0.010s | ● | 0x32F |
| F03.48-F03.49 | Reserved | | | | |

System parameters

| NO. | Function description | Range of settings and definition | Factory setting | Feature | Address |
|---|---|---|---|---|---|
| F04.00 | Parameter and key lock selections | 0: Not locked<br>1: Function parameter locked<br>2: Function parameter and key locked (except for RUN/STOP/JOG)<br>3: All function parameter and key locked | 0 | ● | 0x400 |
| F04.01 | User password | 0～65535 | 0 | ● | 0x401 |
| F04.02-F04.04 | Reserved | | | | |
| F04.05 | Parameter copy | 0: No function<br>1: Send inverter parameters to keyboard and save<br>2: Send keyboard parameters to inverter<br>Remaining value: no operation | 0 | ○ | 0x405 |
| F04.06 | Keyboard special function selection | LED “0” digit:( Running command, stop/reset command)<br>0: Built-in valid, external on valid for stop/reset command<br>1:External valid, built-in on valid for stop/reset command<br>2: All valid. Stop/reset command has the highest priority; invalid when FWD/REV valid at the same time<br>LED “00” digit: reserved<br>LED “000” digit: LCD keyboard language selection<br>0: Chinese<br>1: English | 0000 | ○ | 0x406 |
| F04.07 | Reserved | | | | 0x407 |
| F04.08 | STOP key setting | 0: Non-keyboard control mode is invalid<br>1: Non-keyboard control mode stops according to stop mode<br>2: Non-keyboard control mode stop according to free stop mode | 1 | ○ | 0x408 |

| | | | | | |
|---|---|---|---|---|---|
| F04.09 | UP/DOWN key selection | LED “0” digit: keyboard UN/DOWN key modify selection<br>0: Invalid<br>1: Modify frequency setting by key board numbers F00.08<br>2: Modify PID give setting by key board numbers F11.01<br>LED “00” digit: power off storage selection<br>0: No save frequency after power off<br>1: Save frequency after power off<br>LED “000” digit: action limit<br>0: Operation stop for adjusting<br>1: Adjusting only in operation, stop for holding<br>2: Adjusting in operation, stop for clearing | 0011 | ○ | 0x409 |
| F04.10-F04.13 | Reserved | | | | |
| F04.14 | The display content of the first line in running state | LED "0" and “00” digit: display the first group<br>00～63<br>LED "000" and "0000" digit: display the second group<br>00～63 | 1101 | ● | 0x40E |
| F04.15 | The display content of the first line in running state | Same as above | 0402 | ● | 0x40F |
| F04.16 | The display content of the first line in stop state | Same as above | 1100 | ● | 0x410 |
| F04.17 | The display content of the first line in stop state | Same as above | 0402 | ● | 0x411 |
| F04.18 | The display content of the second line in running state | Same as above | 0402 | ● | 0x412 |
| F04.19 | The display content of the second line in running state | Same as above | 1210 | ● | 0x413 |
| F04.20 | The display content of the second line in stop state | Same as above | 0402 | ● | 0x414 |
| F04.21 | The display content of the second line in stop state | Same as above | 1210 | ● | 0x415 |
| F04.22 | Keyboard display item setting | LED “0” digit: output frequency selection<br>0: Aim frequency<br>1: Running frequency<br>LED “000” digit: power display dimension<br>0: Power display percentage (%)<br>1: Power display kilowatt (KW) | 0000 | ● | 0x416 |
| F04.23 | Monitor display selection | LED “0” digit: C00.00-C00.39<br>0: Normal 1: Debugging<br>LED “00” digit: C00.40-C00.69<br>0: No display 1: Normal display | 0000 | ● | 0x417 |
| F04.24 | Rotate speed display coefficient | 0.0～500.0% | 0000 | ● | 0x418 |
| F04.25 | Power display coefficient | 0.0～500.0% | 100.0% | ● | 0x419 |

| | | | | | |
|---|---|---|---|---|---|
| F04.26 | Alarm selection 1 | LED “0” digit: E.EEP fault (EEPROM storage fault)<br>0: Alarm and free stop<br>1: Alarm and continue operation | 100.0% | ● | 0x41A |
| F04.27 | Reserved | | 0000 | ○ | 0x41B |
| F04.28 | Fan control | 0:After power on the fan runs<br>1: Stop associated with temperature, running is rotary<br>2: Running associated with temperature, stop while the fan stops | 1 | ● | 0x41C |
| F04.29 | Energy braking enable | 0:Off 1:On | 0 | ● | 0x41D |
| F04.30 | Energy braking operation voltage | 115.0%～140.0% | 125.0% | ● | 0x41E |
| F04.31 | Energy braking utilization | 0.0～100.0% | 10.0% | ● | 0x41F |
| F04.32 | PWM carrier frequency | 0.7～16.0kHz | Model set | ※ | 0x420 |
| F04.33 | PWM control mode | LED “0” digit: carrier associated with temperature<br>0: Temperature independent<br>1: Temperature dependent<br>LED “00” digit : carrier associated with output frequency<br>0:not associated 1: associated<br>LED “000” digit: random PWM valid<br>0: Prohibited 1: Valid<br>LED “0000” digit: PWM modulation mode<br>0: Only use three-phase modulation<br>1: Two-phase and three-phase modulation automatically switched | 1111 | ● | 0x421 |

Motor Parameters

| NO. | Function description | Range of settings and definition | Factory default | Feat ure | Address |
|---|---|---|---|---|---|
| F05.00 | Motor mode | 0: Asynchronous motors (AM)<br>1: Permanent magnet synchronous motors (PM) | 0 | × | 0x500 |
| F05.01 | Number of motor poles | 2～98 | 4 | ○ | 0x501 |
| F05.02 | Motor rated power | 0.1～1000.0kW | Model set | ※ | 0x502 |
| F05.03 | Motor rated frequency | 0.01～max frequency | Model set | ※ | 0x503 |
| F05.04 | Motor rated speed | 1～65000rpm | Model set | ※ | 0x504 |
| F05.05 | Motor rated voltage | 1～1500V | Model set | ※ | 0x505 |
| F05.06 | Motor rated current | 0.1～3000.0A | Model set | ※ | 0x506 |
| F05.07 | Asynchronous motor no-load current | 0.1～3000.0A | Model set | ※ | 0x507 |
| F05.08 | Asynchronous motor stator resistance | 0.01～50.00% | Model set | ※ | 0x508 |
| F05.09 | Asynchronous motor rotor resistance | 0.01～50.00% | Model set | ※ | 0x509 |
| F05.10 | Asynchronous motor stator leakage inductance | 0.01～50.00% | Model set | ※ | 0x50A |

| | | | | | |
|---|---|---|---|---|---|
| F05.11 | Asynchronous motor stator inductance | 0.1～2000.0% | Model set | ※ | 0x50B |
| F05.12 | synchronous motor stator resistance | 0.01～50.00% | Model set | ※ | 0x50C |
| F05.13 | Synchronous machine d axis inductance | 0.01～200.00% | Model set | ※ | 0x50D |
| F05.14 | Synchronous machine q axis inductance | 0.01～200.00% | Model set | ※ | 0x50E |
| F05.15 | Synchronous machine back EMF | 1～1500V | Model set | ※ | 0x50F |
| F05.16 | Synchronous machine encoder installation angle | 0.0°～360.0° | Model set | ※ | 0x510 |
| F05.17-F05.19 | Reserved | | | | |
| F05.20 | Motor parameters self-adjustment selections | 0: No operation<br>1: Rotary type self-tuning<br>2: Static type self-tuning<br>3: Stator resistance self-tuning | 0 | ○ | 0x514 |
| F05.21 | Synchronous machine poles searching function | LED “0” digit: closed-loop vector<br>0: OFF<br>1: ON<br>2: On, only operate firstly when electrify<br>LED “00” digit: open-loop vector<br>0: OFF<br>1: ON<br>2: ON, only operate firstly when electrify | 0010 | ○ | 0x515 |
| F05.22-F05.29 | Reserved | | | | |
| F05.30 | Speed feedback or encoder mode | LED “0” digit: encoder mode<br>0: Common ABZ encoder<br>1: Resolver encoder<br>LED “00” digit: encoder direction<br>0: same direction<br>1: reverse direction<br>LED “000” digit: wire break inspection<br>0: OFF 1: ON<br>LED“0000”digit:Z pulse correction enabled<br>0: OFF 1: ON | 0000 | ○ | 0x51E |
| F05.31 | ABZ encoder lines | 0-10000 | 1024 | ○ | 0x51F |
| F05.32 | wire break inspection time | 0.100-60.000s | 2.000s | ● | 0x520 |
| F05.33 | Resolver encoder poles | 2～128 | 2 | ○ | 0x521 |
| F05.34 | Numerator of encoder transmission ratio | 1～32767 | 1 | ○ | 0x522 |
| F05.35 | Denominator of encoder transmission ratio | 1～32767 | 1 | ○ | 0x523 |
| F05.36 | First-order filter of encoder speed inspection | 0.0～100.0ms | 1.0ms | ● | 0x524 |
| F05.37-F05.49 | Reserved | | | | |

Motor VC Parameters

| NO. | Function description | Range of settings and definition | Factory default | Feat ure | Address |
|---|---|---|---|---|---|
| F06.00 | ASR(speed loop) proportional gain 1 | 0.01～100.00 | 10.00 | ● | 0x600 |
| F06.01 | ASR integral time 1 | 0.000～6.000s | 0.200s | ● | 0x601 |
| F06.02 | ASR filter time1 | 0.0～100.0ms | 0.0ms | ● | 0x602 |
| F06.03 | ASR switch frequency 1 | 0.00～Max frequency | 0.00Hz | ● | 0x603 |
| F06.04 | ASR (speed loop) proportional gain 2 | 0.01～100.00 | 10.00 | ● | 0x604 |
| F06.05 | ASR (speed loop) integral time 2 | 0.000～6.000s | 0.200s | ● | 0x605 |
| F06.06 | ASR filter time 2 | 0.0～100.0ms | 0.0ms | ● | 0x606 |
| F06.07 | ASR switch frequency 2 | 0.00～Max frequency | 5.00Hz | ● | 0x607 |
| F06.08 | Electric motor torque limit | 0.0～250.0% | 180.0% | ● | 0x608 |
| F06.09 | Power generation torque limit | 0.0～250.0% | 180.0% | ● | 0x609 |
| F06.10 | Current loop D-axis proportional gain | 0.001～4.000 | 1.000 | ● | 0x60A |
| F06.11 | Current loop D-axis integral gain | 0.001～4.000 | 1.000 | ● | 0x60B |
| F06.12 | Current loop Q-axis proportional gain | 0.001～4.000 | 1.000 | ● | 0x60C |
| F06.13 | Current loop Q-axis integral gain | 0.001～4.000 | 1.000 | ● | 0x60D |
| F06.15 | Vector control motor slip compensation | 0.0～250.0% | 100.0% | ● | 0x60F |
| F06.16 | Vector control start torque | 0.0～250.0% | | | |
| F06.17 | Reserved | | 0 | ○ | 0x612 |
| F06.18 | Position compensation control | 0:OFF 1:ON | 10.0% | ○ | 0x613 |
| F06.19 | compensation gain | 0.0～250.0% | 0.1% | ○ | 0x614 |
| F06.20 | compensation limit | 0.0～100.0% | 10.0% | ○ | 0x615 |
| F06.21 | compensation effective range | 0.0～100.0% | 100.0% | ○ | 0x616 |
| F06.22 | Over excitation braking gain | 0.0～500.0% | 100.0% | ○ | 0x617 |
| F06.23 | Over excitation braking amplitude limit | 0.0～250.0% | 0 | ○ | 0x618 |
| F06.24 | Vector control energy saving function | 0:OFF 1:ON | 50.0% | ● | 0x619 |
| F06.25 | Energy saving control gain | 0.0～80.0% | 0.010s | ● | 0x61A |
| F06.26 | Energy saving control low-pass filter | 0.000～6.000s | 200.0% | ● | 0x61B |
| F06.27 | Motor constant power area power limit | 0.0～250.0% | 60.0% | ○ | 0x61C |
| F06.28 | Motor weak magnetic current upper limit | 0.0～250.0% | 10.0% | ● | 0x61D |
| F06.29 | Motor weak magnetic feed forward gain | 0.0～200.0% | 10.0% | ● | 0x61E |

| | | | | | |
|---|---|---|---|---|---|
| F06.30 | Motor weak magnetic gain | 0.0～500.0% | 10.0% | ● | 0x620 |
| F06.32 | MTPA gain | 0.0～500.0% | 100.0% | ● | 0x621 |
| F06.33 | MTPA filter time | 0.0～100.0ms | 1.0ms | ● | 0x621 |
| F06.34 | Reserved | | | | 0x622 |
| F06.35 | Low frequency pull in current | 0.0～100.0% | 10.0% | ● | 0x623 |
| F06.36 | High frequency pull in current | 0.0～100.0% | 10.0% | ● | 0x624 |
| F06.37 | Frequency of current pulled in | 0.0～100.0% | 10.0% | ● | 0x625 |
| F06.38-F06.69 | | | | | |

Torque Control Parameters

| NO. | Function description | Range of settings and definition | | Factory default | Feat ure | Address |
|---|---|---|---|---|---|---|
| F07.00 | Torque/Speed control | 0:Speed control<br>1:Torque control Torque/Speed control | | 0 | ● | 0x700 |
| F07.01 | Torque given channels selection | 0: keyboard number given<br>1: reserved<br>2: AI1<br>3: AI2 | 4: reserved<br>5: PUL<br>6: RS485 communication given<br>7: Optional card | 0 | ● | 0x701 |
| F07.02 | Torque keyboard number setting | 0～100.0% | | 0.0% | ● | 0x702 |
| F07.03 | Torque input lower limit | 0～100.00% | | 0.00% | ● | 0x703 |
| F07.04 | Lower limit corresponding setting | -200.00%～200.00% | | 0.00% | ● | 0x704 |
| F07.05 | Torque input upper limit | 0～100.00% | | 100.00% | ● | 0x705 |
| F07.06 | Upper limit corresponding setting | -200.00%～200.00% | | 100.00% | ● | 0x706 |
| F07.07 | Given first-order filter time | 0.000～6.000S | | 0.100s | ● | 0x707 |
| F07.08 | Output torque upper limit | 0～200.0% | | 150.0% | ● | 0x708 |
| F07.09 | Output torque lower limit | 0～200.0% | | 0% | ● | 0x709 |
| F07.10 | Torque control FWD speed limit selection | 0: function code F07.12setting<br>1: reserved<br>2:AI1 × F07.12<br>3: AI2 × F07.12<br>4: reserved<br>5:PUL × F07.12<br>6: RS485 communication given × F07.12<br>7: Optional card × F07.12 | | 0 | ● | 0x70A |
| F07.11 | Torque control REV speed limit selection | 0: function code F07.13setting<br>1: reserved<br>2:AI1 × F07.13<br>3: AI2 × F07.13<br>4: reserved<br>5:PUL × F07.13<br>6: RS485 communication given × F07.13<br>7: Optional card × F07.13 | | 0 | ● | 0x70B |

| | | | | | |
|---|---|---|---|---|---|
| F07.12 | Torque control FWD max speed limit | 0.0～100.0% | 100.0% | ● | 0x70C |
| F07.13 | Torque control REV max speed limit | 0.0～100.0% | 100.0% | ● | 0x70D |

Motor V/F Control Parameter

| NO. | Function description | Range of settings and definition | | Factory default | Feat ure | Address |
|---|---|---|---|---|---|---|
| F08.00 | Linear V/F curve selection | 0: Beeline VF curve<br>1-9: 1.1-1.9 th power VF curve respectively<br>10: square VF curve<br>11: self-defined VF curve | | 0 | ○ | 0x800 |
| F08.01 | Self-setting voltage V1 | 0.0～100.0% | | 3.0% | ○ | 0x801 |
| F08.02 | Self-setting frequency F01 | 0.00～max frequency | | 1.00Hz | ○ | 0x802 |
| F08.03 | Self-setting voltage V2 | 0.0～100.0% | | 28.0% | ○ | 0x803 |
| F08.04 | Self-setting frequency F02 | 0.00～max frequency | | 10.00Hz | ○ | 0x804 |
| F08.05 | Self-setting voltage V3 | 0.0～100.0% | | 55.0% | ○ | 0x805 |
| F08.06 | Self-setting frequency F03 | 0.00～max frequency | | 25.00Hz | ○ | 0x806 |
| F08.07 | Self-setting voltage V4 | 0.0～100.0% | | 78.0% | ○ | 0x807 |
| F08.08 | Self-setting frequency F04 | 0.00～max frequency | | 37.50Hz | ○ | 0x808 |
| F08.09 | Self-setting voltage V5 | 0.0～100.0% | | 100.0% | ○ | 0x809 |
| F08.10 | Self-setting frequency F05 | 0.00～max frequency | | 50.00Hz | ○ | 0x80A |
| F08.11 | Output voltage percentage | 25.0～120.0% | | 100.0% | ○ | 0x80B |
| F08.12 | Torque boost | 0.0～30.0% | | 0.0% | ● | 0x80C |
| F08.13 | Torque boost cut-off frequency | 0.0～100.0% | | 100.0% | ● | 0x80D |
| F08.14 | Slip compensation gain | 0.0～200.0% | | 100.0% | ● | 0x80E |
| F08.15 | Slip compensation limit | 0.0～300.0% | | 100.0% | ● | 0x80F |
| F08.16 | Slip compensation filter time | 0.000～6.000s | | 0.200s | ● | 0x810 |
| F08.17 | oscillation suppression gain | 0.0～900.0% | | 100.0% | ● | 0x811 |
| F08.19 | Auto energy saving control | 0: off | 1:on | 0 | ○ | 0x813 |
| F08.20 | Energy saving lower limit frequency | 0.0～50.00Hz | | 15.00Hz | ○ | 0x814 |
| F08.21 | Energy saving lower limit voltage | 20.0～100.0% | | 50.0% | ○ | 0x815 |
| F08.22 | Energy saving regulation rate of voltage | 0.000～0.200V/MS | | 0.010V/MS | ● | 0x816 |
| F08.23 | Energy saving recovery rate of voltage | 0.000～2.000V/MS | | 0.200V/MS | ● | 0x817 |
| F08.24-F08.29 | Reserved | | | | | |
| F08.30 | Output voltage source of voltage-frequency separation | 0: function code F8.31 setting<br>1: Reserved<br>2: AI1<br>3: AI2 | 4: Reserved<br>5: PUL<br>6: PID output<br>7: RS485<br>8: Optional | 0 | ● | 0x81E |
| F08.31 | Output voltage source of voltage-frequency separation number setting | 0.0%～100.0% | | 0.0% | ● | 0x81F |

| | | | | | |
|---|---|---|---|---|---|
| F08.32 | Output voltage source of voltage-frequency separation ACC time | 0.0～100.00s | 10.00s | ● | 0x820 |
| F08.33 | Output voltage source of voltage-frequency separation DEC time | 0.0～100.00s | 10.00s | ● | 0x821 |
| F08.34 | voltage-frequency separation stop time | 0:Output voltage and frequency ACC/DEC no interaction<br>1: Output voltage down to 0V, then output frequency start to decrease | 0 | ● | 0x822 |

Protection and Malfunction Parameter Group

| NO. | Function description | Range of settings and definition | Factory default | Feat ure | Address |
|---|---|---|---|---|---|
| F10.00 | OC suppression function | 0: Suppression valid<br>1: ACC/DEC valid, constant speed invalid | 0 | ● | 0xA00 |
| F10.01 | OC suppression point | 0.0～300.0% | 160.0% | ● | 0xA01 |
| F10.02 | OC suppression gain | 0.0～500.0% | 100.0% | ● | 0xA02 |
| F10.03 | Current hardware protection settings | LED “0” digit: CBC(cycle by cycle, limit current according to its waveform)<br>0: off 1: on<br>LED”00” digit: OC protection interference suppression<br>0: off 1: First grade 2: Second grade<br>LED“000”digit: SC protection interference suppression<br>0: off 1: First grade 2: Second grade<br>LED“0000”digit: Reserved | 0001 | ○ | 0xA03 |
| F10.04 | Reserved | | | | 0xA04 |
| F10.05 | Hardware protection of DC | 0: Invalid 1: Valid | | | 0xA05 |
| F10.06 | Bus over voltage suppression function | LED”0” digit: Over voltage suppression<br>0: Invalid 1: Valid in DEC<br>2: Valid both in ACC/DEC<br>LED”00” digit: Over-excitation control<br>0: off 1: on<br>LED”000”/”0000”: Reserved | 0012 | ○ | 0xA06 |
| F10.07 | Bus over voltage suppression point | 110.0～150.0% | 128.0% | ※ | 0xA07 |
| F10.08 | Bus over voltage suppression gain | 0.0～500.0% | 100.0% | ● | 0xA08 |
| F10.09 | Bus under voltage suppression function | 0: Invalid<br>1: Valid | 0 | ○ | 0xA09 |
| F10.10 | Bus under voltage suppression point | 60.0～90.0% | 80.0% | ※ | 0xA0A |
| F10.11 | Bus under voltage suppression gain | 0.0～500.0% | 100.0% | ● | 0xA0B |
| F10.12 | Bus under voltage protection point | 60.0～90.0% | 60.0% | ※ | 0xA0C |
| F10.13 | Phase missing threshold | 0～100% | 10.0 | ○ | 0xA0D |

| | | | | | |
|---|---|---|---|---|---|
| F10.14 | Short-circuit detection after power on | LED “0” digit: Earth short-circuit detection after power on<br>0: off 1: on<br>LED”00” digit: Fan short-circuit detection after power<br>0: off 1: on | 11 | ○ | 0xA0E |
| F10.15 | phase missing protection | LED“0” digit: Output phase missing protection<br>0: off 1:on<br>LED“00” digit: Input phase missing protection<br>0: off 1: Open Alarm<br>2: Open Fault(STOP VFD)<br>LED“000” /“0000” digit: Reserved | 0021 | ○ | 0xA0F |
| F10.16 | Motor overload protection curve coefficient | 0.0～250.0% | 100.0% | ○ | 0xA10 |
| F10.17 | Load pre alarm detection setting | LED“0” digit: Detection selection(protection 1)<br>0: Not detection<br>1: Detected load is too large<br>2: Detected load is too large only at constant speed<br>3: Detected underloaded<br>4: Detected underloaded only at constant speed<br>LED”00” digit: Alarm selection<br>0: alarm and continue operation<br>1: Fault protection and free stop<br>LED”000” digit: Detection selection (protection 2)<br>0: Not detection<br>1: Detected load is too large<br>2: Detected load is too large only at constant speed<br>3: Detected underloaded<br>4: Detected underloaded only at constant speed<br>LED “0000” digit: Alarm selection<br>0: Alarm and continue operation<br>1: Fault warn and free stop | 0000 | ○ | 0xA11 |
| F10.18 | Pre alarm detection level 1 for load | 0.0～200.0% | 130.0% | ○ | 0xA12 |
| F10.19 | Load pre alarm detection time 1 | 0.0～60.0s | 5.0s | ○ | 0xA13 |
| F10.20 | Pre alarm detection level 2 for load | .0～200.0% | 30.0% | ○ | 0xA14 |
| F10.21 | Load pre alarm detection time 2 | 0.0～60.0s | 5.0s | ○ | 0xA15 |
| F10.22 | Reserved | | | | 0xA16 |

| | | | | | |
|---|---|---|---|---|---|
| F10.23 | Protection action of speed bias excess | LED “0” digit: Detection selection<br>0: Not detected<br>1: Detected only at constant speed<br>2: Detecting<br>LED “00” digit: Alarm selection<br>0: Free stop and report fault<br>1: Alarm and continue operation<br>LED “000”/”0000” digit: Reserved | 0000 | ○ | 0xA17 |
| F10.24 | Detection threshold when speed bias excess | 0.0～60.0% | 10.0% | ○ | 0xA18 |
| F10.25 | Detection time when speed bias excess | 0.0～60.0s | 2.0s | ○ | 0xA19 |
| F10.26 | Stall protection action | LED “0” digit: Detection selection<br>0: Not detected<br>1: Detected at constant speed<br>2: Detecting<br>LED “00” digit: Alarm selection<br>0: Free stop and report fault<br>1: Alarm and continue operation<br>LED “000” digit: Reserved<br>LED “0000” digit: Reserved | 0000 | ○ | 0xA1A |
| F10.27 | Stall detection threshold | 0.0～150.0% | 110.0% | ○ | 0xA1B |
| F10.28 | Stall detection time | 0.000～2.000s | 0.010s | ○ | 0xA1C |
| F10.29 | Motor overshot Protection threshold (extend) | 0～200°C | | ○ | 0xA1D |
| F10.30 | Motor overshot Pre alarm threshold (extend) | 0～200°C | | ○ | 0xA1E |
| F10.31-F10.37 | Reserved | | | | |
| F10.38 | Malfunction self-recovery times | 0～5 | 0 | ○ | 0xA26 |
| F10.39 | Malfunction self-recovery interval time | 0.1～100.0s | 1.0s | ○ | 0xA27 |

PID Process Control Parameter Group

| NO. | Function description | Range of settings and definition | | Factory default | Feature | Address |
|---|---|---|---|---|---|---|
| F11.00 | PID Controller given signal source | 0: Keypad digit PID given<br>1: Reserved<br>2: AI1<br>3: AI2<br>4: Reserved | 5: PUL<br>6: RS485<br>7: Option card<br>8:Terminal selection | 0 | ● | 0xB00 |
| F11.01 | Keyboard digit PID given / feedback | 0.00～100.0% | | 50.0% | ● | 0xB01 |
| F11.02 | PID given changing time | 0.00～60.00s | | 1.00s | ● | 0xB02 |
| F11.03 | PID controller feedback signal source | 0: Keypad digital PID feedback<br>1: Reserved<br>2: AI1<br>3:AI2 | 4: Reserved<br>5: PUL<br>6: RS485<br>7: Option card<br>8:Terminal selection | 2 | ● | 0xB03 |

| | | | | | |
|---|---|---|---|---|---|
| F11.04 | Feedback signal filter time | 0.000～6.000s | 0.010s | ● | 0xB04 |
| F11.05 | Feedback signal gain | 0.00～10.00 | 1.00 | ● | 0xB05 |
| F11.06 | Given and feedback range | 0～100.0 | 100.0 | ● | 0xB06 |
| F11.07 | PID control selection | LED"0" digit: Feedback feature selection<br>0: Positive feature 1:Negative feature<br>LED"00"/"000" digit: Reserved<br>LED"0000" digit: Differential adjustment properties<br>0: Differential bias<br>1: Differential of feedback | 0100 | ● | 0xB07 |
| F11.08 | PID preset output | 0.0～100.0% | 100.0% | ● | 0xB08 |
| F11.09 | PID preset output running time | 0.0～6500.0s | 0.0s | ● | 0xB09 |
| F11.10 | PID control deviation limit | 0.0～100.0% | 0.0% | ● | 0xB0A |
| F11.11 | Proportional gain P1 | 0.000～8.000 | 0.100 | ● | 0xB0B |
| F11.12 | Integral time I1 | 0.0～600.0s | 1.0s | ● | 0xB0C |
| F11.13 | Differential time D1 | 0.000～6.000s | 0.000s | ● | 0xB0D |
| F11.14 | Proportional gain P2 | 0.000～8.000 | 0.100 | ● | 0xB0E |
| F11.15 | Integral time I2 | 0.0～600.0s | 1.0s | ● | 0xB0F |
| F11.16 | Differential gain D2 | 0.000～6.000s | 0.000s | ● | 0xB10 |
| F11.17 | PID Parameter switching condition | 0: No switch<br>1: Use DI terminal to switch<br>2: Switch according to deviation | 0 | ● | 0xB11 |
| F11.18 | Low value of switching deviation | 0.0～100.0% | 20.0% | ● | 0xB12 |
| F11.19 | High value of switching deviation | 0.0～100.0% | 80.0% | ● | 0xB13 |
| F11.20 | Reserved | | | | 0xB14 |
| F11.21 | Differential limit | 0.0～100.0% | 5.0% | ● | 0xB15 |
| F11.22 | PID output upper limit | 0.0～100.0% | 100.0% | ● | 0xB16 |
| F11.23 | PID output lower limit | -100.0～F11.19 | 0.0% | ● | 0xB17 |
| F11.24 | PID output filter time | 0.000～6.000s | 0.000s | ● | 0xB18 |
| F11.25 | Feedback wire break detection time | 0.0～120.0s | 1.0s | ● | 0xB19 |
| F11.26 | Feedback wire break action selection | 0: Go on PID operation without alarm<br>1: Stop and alarm malfunction<br>2: continue to PID operation and output alarm signal<br>3: Run at the current frequency and output alarm signal | 0 | ● | 0xB1A |
| F11.27 | Wire break alarm upper limit | 0.0～100.0% | 100.0% | ● | 0xB1B |
| F11.28 | Wire break alarm lower limit | 0.0～100.0% | 0.0% | ● | 0xB1C |
| F11.29 | Close-loop suspend detection threshold | 0.0～100.0% | 0.0% | ● | 0xB1D |
| F11.30 | Close-loop suspend detection time | 0.0～600.0s | 1.0s | ● | 0xB1E |

Multi-Speed and PLC Function Parameter Group

| NO. | Function description | Range of setting and definition | Factory default | Fea ture | Address |
|---|---|---|---|---|---|
| F12.00 | PLC Speed 1 | 0.00～Max frequency | 10.00Hz | ● | 0xC00 |
| F12.01 | PLC Speed 2 | 0.00～Max frequency | 20.00Hz | ● | 0xC01 |
| F12.02 | PLC Speed 3 | 0.00～Max frequency | 30.00Hz | ● | 0xC02 |
| F12.03 | PLC Speed 4 | 0.00～Max frequency | 40.00Hz | ● | 0xC03 |
| F12.04 | PLC Speed 5 | 0.00～Max frequency | 50.00Hz | ● | 0xC04 |
| F12.05 | PLC Speed 6 | 0.00～Max frequency | 40.00Hz | ● | 0xC05 |
| F12.06 | PLC Speed 7 | 0.00～Max frequency | 30.00Hz | ● | 0xC06 |
| F12.23 | PLC Speed 8 | 0.00～Max frequency | 20.00Hz | ● | 0xC07 |
| F12.08 | PLC Speed 9 | 0.00～Max frequency | 10.00Hz | ● | 0xC08 |
| F12.09 | PLC Speed 10 | 0.00～Max frequency | 20.00Hz | ● | 0xC09 |
| F12.10 | PLC Speed 11 | 0.00～Max frequency | 30.00Hz | ● | 0xC0A |
| F12.11 | PLC Speed 12 | 0.00～Max frequency | 40.00Hz | ● | 0xC0B |
| F12.12 | PLC Speed 13 | 0.00～Max frequency | 50.00Hz | ● | 0xC0C |
| F12.13 | PLC Speed 14 | 0.00～Max frequency | 40.00Hz | ● | 0xC0D |
| F12.14 | PLC Speed 15 | 0.00～Max frequency | 30.00Hz | ● | 0xC0E |
| F12.15 | PLC Running mode selection | LED"0" digit: cycle mode<br>0: Stop after single cycle<br>1: Continuous cycles<br>2: Keep final value after single cycle<br>LED"00" digit: Time unit<br>0: second 1: minute 2:hour<br>LED"000" digit: Power down memory<br>0: Not save 1: save<br>LED"0000" digit: Start mode<br>0: Restart from the 1st stage<br>1: Restart from the stop stage<br>2: Continue running from the time when stop | 0000 | ● | 0xC0F |
| F12.16 | PLC 1st step running time | 0.0～6500.0(s/m/h) | 10.0 | ● | 0xC10 |
| F12.17 | PLC 2nd step running time | 0.0～6500.0(s/m/h) | 10.0 | ● | 0xC11 |
| F12.18 | PLC 3rd step running time | 0.0～6500.0(s/m/h) | 10.0 | ● | 0xC12 |
| F12.19 | PLC 4thstep running time | 0.0～6500.0(s/m/h) | 10.0 | ● | 0xC13 |
| F12.20 | PLC 5th step running time | 0.0～6500.0(s/m/h) | 10.0 | ● | 0xC14 |
| F12.21 | PLC 6th step running time | 0.0～6500.0(s/m/h) | 10.0 | ● | 0xC15 |
| F12.22 | PLC 7th step running time | 0.0～6500.0(s/m/h) | 10.0 | ● | 0xC16 |
| F12.23 | PLC 8th step running time | 0.0～6500.0(s/m/h) | 10.0 | ● | 0xC17 |
| F12.24 | PLC 9th step running time | 0.0～6500.0(s/m/h) | 10.0 | ● | 0xC18 |
| F12.25 | PLC 10th step running time | 0.0～6500.0(s/m/h) | 10.0 | ● | 0xC19 |
| F12.26 | PLC 11th step running time | 0.0～6500.0(s/m/h) | 10.0 | ● | 0xC1A |
| F12.27 | PLC 12th step running time | 0.0～6500.0(s/m/h) | 10.0 | ● | 0xC1B |
| F12.28 | PLC 13th step running time | 0.0～6500.0(s/m/h) | 10.0 | ● | 0xC1C |
| F12.29 | PLC 14th step running time | 0.0～6500.0(s/m/h) | 10.0 | ● | 0xC1D |
| F12.30 | PLC 15th step running time | 0.0～6500.0(s/m/h) | 10.0 | ● | 0xC1E |
| F12.31 | PLC 1st-15th step direction and ADD/DEC time | LED"0" digit: current step run direction<br>0: FWD | 0000 | ● | 0xC1F |
| F12.32 | | | 0000 | ● | 0xC20 |

| | | | | | |
|---|---|---|---|---|---|
| F12.33 | | 1: REV<br>LED"00" digit: ACC/DEC time in this step<br>0: ACC/DEC time 1<br>1: ACC/DEC time 2<br>2: ACC/DEC time 3<br>3: ACC/DEC time 4<br>LED"000" digit: Reserved<br>LED"0000" digit: Reserved | 0000 | ● | 0xC21 |
| F12.34 | | | 0000 | ● | 0xC22 |
| F12.35 | | | 0000 | ● | 0xC23 |
| F12.36 | | | 0000 | ● | 0xC24 |
| F12.37 | | | 0000 | ● | 0xC25 |
| F12.38 | | | 0000 | ● | 0xC26 |
| F12.39 | | | 0000 | ● | 0xC27 |
| F12.40 | | | 0000 | ● | 0xC28 |
| F12.41 | | | 0000 | ● | 0xC29 |
| F12.42 | | | 0000 | ● | 0xC2A |
| F12.43 | | | 0000 | ● | 0xC2B |
| F12.44 | | | 0000 | ● | 0xC2C |
| F12.45 | | | 0000 | ● | 0xC2D |
| F12.46-F12.48 | Reserved | | | | |
| F12.49 | Swing frequency control | 0: invalid / 1: valid | 0 | ● | 0xC31 |
| F12.50 | Swing frequency amplitude | 0: Relative to central frequency<br>1: Relative to max frequency | 0 | ● | 0xC32 |
| F12.51 | Reserved | 0.0～100.0% | 10.0% | ● | 0xC34 |
| F12.52 | Swing frequency amplitude | | | | |
| F12.53 | Jump frequency amplitude | 0.0～50.0% | 10.0% | ● | |
| F12.54 | Swing frequency rising time | 0.00～650.00s | 5.00s | ● | 0xC36 |
| F12.55 | Swing frequency falling time | 0.00～650.00s | 5.00s | ● | 0xC37 |

Communication Control Function Parameter Group

| NO. | Function description | Range of setting and definition | Factory default | Feature | Address |
|---|---|---|---|---|---|
| F13.00 | Main-slave machine selection | LED "0" digit: Modbus main-slave selection<br>0: Slave machine<br>1: Main machine<br>LED "00" /"000"/"0000"digit: reserved | 0000 | ○ | 0xD00 |
| F13.01 | 485 communication address | 1～247 | 1 | ○ | 0xD01 |
| F13.02 | Communication baud rate selection | LED"0" digit:485 communication<br>0:1200 bps 1:2400 bps<br>2:4800 bps 3:9600 bps<br>4:19200 bps 5:38400 bps<br>LED "00" /"000"/"0000"digit: reserved | 0003 | ○ | 0xD02 |
| F13.03 | Modbus data format | 0: (N,8,1)format 3: (N,8,2) format<br>1: (E,8,1) format 4: (E,8,2) format<br>2: (O,8,1) format 5: (O,8,2) format | 0 | ○ | 0xD03 |
| F13.04 | Communication ratio setting | 0.00～5.00 | 1.00 | ● | 0xD04 |
| F13.05 | Modbus communication answer delay | 0～500ms | 0ms | ● | 0xD05 |
| F13.06 | Modbus communication overtime fault time | 0.1～100.0s | 1.0s | ● | 0xD06 |

| | | | | | |
|---|---|---|---|---|---|
| F13.07 | Modbus communication fault action mode selection | 0: No checked overtime fault<br>1: alarm and stop freely<br>2: Alarm and continue running<br>3: Forced stop | 0 | ● | 0xD07 |
| F13.08 | Modbus Responds dispose | 0:Write operation with response<br>1: Write operation without response | 0 | ● | 0xD08 |
| F13.09 | Main machine sending selection | LED“0”digit: the first group transmitting frame selection<br>0: Invalid<br>1: Main machine run command<br>2: Main machine given frequency<br>3: Main machine output frequency<br>4: Main machine upper limit frequency<br>5: Main machine given torque<br>6: Main machine output torque<br>7/8: Reserved<br>9: Main machine given PID<br>A: Main machine feedback PID<br>LED“00”digit: the second group transmitting frame selection<br>LED“000”digit:<br>the third group transmitting frame selection<br>LED“0000”digit: the fourth group transmitting frame selection<br>Same as above | 0031 | ● | 0xD09 |
| F13.10 | RS485 Communication port configuration | 0: Modbus communication<br>1: serial port communication | 0 | ● | 0xD0A |

## 4.2 Terminal of Input and Output Function Selection

| X | Function Specification | X | Function Specification | X | Function Specification |
|---|---|---|---|---|---|
| 0 | No function | 16-19 | Multispeed terminal 1-4 | 41 | Timer clear terminal |
| 1 | FWD | 20 | PID control cancel | 42 | Counter input terminal |
| 2 | REV | 21 | PID control pause | 43 | Counter clear terminal |
| 3 | 3-line running(Xi) | 22 | PID trait switch | 44 | DC braking command |
| 4 | FWD JOG | 23 | PID gain switch | 45 | Pre excitation command terminal |
| 5 | REV JOG | 24-26 | PID given switch 1-3 | 48 | Command channel switch to keyboard |
| 6 | Free stop | 27-29 | PID feedback switch1-3 | 49 | Command channel switch to terminal |
| 7 | Emergency stop | 30 | PLC pause | 50 | Command channel switch to communication |
| 8 | Malfunction reset | 31 | PLC restart | 51 | Command channel switch to expansion card |
| 9 | External malfunction input | 32 | ACC/DEC time selection terminal 1 | 52 | Operation banned |
| 10 | Frequency UP | 33 | ACC/DEC time selection terminal 2 | 53 | Forward banned |
| 11 | Frequency DW | 34 | ACC/DEC pause | 54 | Reverse banned |
| 12 | UP/DW clear | 35 | Swing frequency input | 60 | Speed torque control switch |
| 13 | Switch channel A to channel B | 36 | Swing frequency | 61 | Position control switch |
| 14 | Channel combination switch to A | 37 | Swing frequency reset | No Definition Code:38-39,46-47, 55-59:Reserved | |
| 15 | Channel combination switch to B | 40 | Timer trigger terminal | | |

| Y | Function Specification | Y | Function Specification | Y | Function Specification |
|---|---|---|---|---|---|
| 0 | No output | 1 | FWD running | 2 | REV running |
| 3 | FWD running | 4 | Fault warning 1,enable output including fault reset auto period | 5 | Fault trip alarm 2(no alarm when fault self-recovery) |
| 6 | External fault stop | 7 | External fault stop Under voltage | 8 | Finish ready for running |
| 9 | Output frequency level detection 1(FDT1) | 10 | Output frequency level detection 2(FDT2) | 11 | Reach given frequency |
| 12 | 0 speed running | 13 | Reach upper limit frequency | 14 | Reach lower frequency limit |
| 15 | Program running circle completed | 16 | Program running segment completed | 17 | PID feedback exceeds upper limit |
| 18 | PID feedback under lower limit | 19 | PID feedback sensor wires break | 21 | Timer time arrived |
| 22 | Counter reaching max value | 23 | Counter reach set value | 24 | Braking |
| 25 | PG feedback wire break | 26 | Emergency stop | 27 | Load pre-alarm output 1 |
| 28 | Load pre-alarm output 2 | 29 | Reserved | 30 | RS485 given |

## 4.3 Monitor Code

Access 'C' parameter group by pressing 'PRG' for more than 2s; check the current state of VFD

(1 ) C00-Basic Parameter Monitor Group

| Function | Function name | Unit and definitio | Address | Function | Function name | Unit and definition | Address |
|---|---|---|---|---|---|---|---|
| C00.00 | Given frequency | 0.01Hz | 0x2100 | C00.20 | Analog output AO1 | 0.01V/0.01mA/0.01kHz | 0x2114 |
| C00.01 | Output frequency | 0.01Hz | 0x2101 | C00.21 | Analog output AO2(extend) | 0.01V/0.01mA/0.01kHz | 0x2115 |
| C00.02 | Output current | 0.1A | 0x2102 | C00.22 | Counting value of counter | | 0x2116 |
| C00.03 | Input voltage | 0.1V | 0x2103 | C00.23 | Running time after power on | 0.1 hour | 0x2117 |
| C00.04 | Output voltage | 0.1V | 0x2104 | C00.24 | Local accumulative running time | hour | 0x2118 |
| C00.05 | Machine speed | 1RPM | 0x2105 | C00.25 | VFD power level | kW | 0x2119 |
| C00.06 | Given torque | 0.1% | 0x2106 | C00.26 | VFD rated voltage | V | 0x211A |
| C00.07 | Output torque | 0.1% | 0x2107 | C00.27 | VFD rated current | A | 0x211B |
| C00.08 | PID given value | 0.1% | 0x2108 | C00.28 | Software version | | 0x211C |
| C00.09 | PID feedback value | 0.1% | 0x2109 | C00.29 | PG feedback frequency | 0.01Hz | 0x211D |
| C00.10 | Output power | 0.1% | 0x210A | C00.30 | Counted time of timer | sec/min/hour | 0x211E |
| C00.11 | Bus voltage | 0.1V | 0x210B | C00.31 | PID output value | 0.00% | 0x211F |
| C00.12 | Module temperature 1 | 0.1℃ | 0x210C | C00.32 | Software sub-version | | 0x2120 |
| C00.13 | Module temperature 2 | 0.1℃ | 0x210D | C00.33 | Encoder angle | 0.1° | 0x2121 |
| C00.14 | Input terminal X on state | See input terminal diagram | 0x210E | C00.34 | Encoder deviation accumulative | 1 | 0x2122 |
| C00.15 | Output terminal Y on state | See output terminal diagram | 0x210F | C00.35 | Encoder Z signal pulse count | 1 | 0x2123 |
| C00.16 | Analog AI1 input value | 0.001V/0.001mA | 0x2110 | C00.36 | Fault pre alarm code | 1 | 0x2124 |
| C00.17 | Analog AI2 input value | 0.001V/0.001mA | 0x2111 | C00.37 | Total power consumption (low bit) | 1° | 0x2125 |

| | | | | | | | |
|---|---|---|---|---|---|---|---|
| C00.18 | Reserved | | 0x2112 | C00.38 | Total power consumption (high bit) | 10000° | 0x2126 |
| C00.19 | Pulse input value of PUL port | 0.001kHz | 0x2113 | C00.39 | Power factor angle | 1° | 0x2127 |

(2 ) C01-Malfunction Diagnosis Monitor Group

| Function code | Function name | Unit and definition | Address |
|---|---|---|---|
| C01.00 | Malfunction types | See fault code table | 0x2200 |
| C01.01 | Malfunction diagnosis information | See fault code table | 0x2201 |
| C01.02 | Malfunction running frequency | 0.00～Max frequency | 0x2202 |
| C01.03 | Malfunction output Voltage | 0～1500V | 0x2203 |
| C01.04 | Malfunction out Current | 0.1～1000.0A | 0x2204 |
| C01.05 | Malfunction Bus Voltage | 0～3000V | 0x2205 |
| C01.06 | Malfunction module temperature | 0～100℃ | 0x2206 |
| C01.07 | Malfunction machine state | LED “0” digit: Running direction<br>0: FWD 1: REV<br>LED “00” digit: Running status<br>0: Stop 1: ACC<br>2: DEC 3:Constant speed<br>LED “000” digit: Reserved<br>LED “0000” digit: Reserved | 0x2207 |
| C01.08 | Malfunction input terminal status | See input terminal chart | 0x2208 |
| C01.09 | Malfunction output terminal status | See output terminal chart | 0x2209 |
| C01.10 | The last malfunction types | Please see malfunction code table | 0x220A |
| C01.11 | The first diagnosis information | Please see malfunction code table | 0x220B |
| C01.12 | The last malfunction running frequency | 0.00~Maxfrequecy | 0x220C |
| C01.13 | The last malfunction output voltage | 0～1500V | 0x220D |
| C01.14 | The last malfunction output current | 0.1～2000.0A | 0x220E |
| C01.15 | The last malfunction bus voltage | 0～3000V | 0x220F |
| C01.16 | The last malfunction module temperature | 0～100℃ | 0x2210 |
| C01.17 | The last malfunction machine state | LED “0” digit: Running direction<br>0: FWD<br>1: REV<br>LED “00” digit: Running status<br>0: Stop<br>1: Constant speed<br>2: ACC<br>3: DEC<br>LED “000” digit: Reserved<br>LED “0000” digit: Reserved | 0x2211 |
| C01.18 | The last malfunction input terminal state | See input terminal chart | 0x2212 |
| C01.19 | The last malfunction output terminal state | See output terminal chart | 0x2213 |
| C01.20 | The first two malfunction types | Please see malfunction information code table | 0x2214 |
| C01.21 | The first two diagnosis information | | 0x2215 |
| C01.22 | The first three malfunction types | | 0x2216 |
| C01.23 | The first three diagnosis information | | 0x2217 |

## 4.4 Fault Code

| Display | Code | Fault type | Display | Code | Fault type | Display | Code | Fault type |
|---|---|---|---|---|---|---|---|---|
| E. SC | 1 | System abnormal | E.oC1 | 4 | ACC over current | E.oC2 | 5 | DEC over current |
| E.oC3 | 6 | Overcurrent at constant speed | E.oU1 | 7 | ACC over voltage | E.oU2 | 8 | DEC over voltage |
| E.oU3 | 9 | Overvoltage at constant speed | E.LU2 | 10 | Under voltage when running | E.oL1 | 11 | Motor overload |
| E.oL2 | 12 | Inverter overload | E.iLF<br>A.iLF | 13/65 | Input side loss phase | E.oLF | 14 | Output side phase missing |
| E.oH2 | 15 | Rectifier overheat | E.oH1 | 16 | Inverter overheat | E. EF | 17 | External fault |
| E. CE<br>A. CE | 18/74 | RS485 communication abnormal | E.HAL | 19 | Current detection fault | E.rE1 | 20 | Motor detection fault |
| E.EEP<br>A.EEP | 21/69 | Storage fault | E.rE1 | 25 | Motor detection fault | E.CPE | 26 | Parameter copy abnormal |
| E. PG | 27 | PG card connection abnormal(pre/alarm) | E.oU4 | 28 | Over voltage at stop | E.P id<br>A.P id | 29/66 | PID feedback fault(pre/alarm) |
| L.iFE | 30 | Reserved | E.iAE | 31 | Learning fault of Initial position angle | E.dEF<br>A.dEF | 32/70 | Speed deviation excess |
| E.SPd<br>A.SPd | 33/71 | Stall protection | E.Ld1<br>A.Ld1 | 34/67 | Load protection 1 | E.Ld2<br>A.Ld2 | 35/68 | Load protection 2 |
| E.CPU | 36 | CPU over time | E.LoC | 37 | OTP verification fault | E.038 | 38 | Synchronous motor out-of step |
| L.U.1 | 64 | Under voltage at stop | A.072 | 72 | GPS locked | A.073 | 73 | GPS wire break |

# Chapter 5 Periodic Overhaul and Maintenance

## 5.1 Overhaul

Frequency inverter is composed by semi-conductive components, passive electronic component and motive component. All of these components have useful life. Even under normal working environment, some of the components cannot work after the life time. To avoid malfunction, daily checking, periodic overhaul, component changing and other maintenance should be carried out to prevent. We suggest one overhaul every 3-4 months after installation.

● Daily checking

To avoid machine damage and to prolong life time, please check the following items every day.

| Items | Checking content | Treatment |
|---|---|---|
| Power supply | Check if power supply meets the Requirement and whether there is lack-phase. | Treat it as nameplate explains. |
| Surroundings | Check whether it meets the environment requirement. | Make sure the problem and solve it. |
| Cooling system | Check whether the inverter or the motor heat or change color abnormally and cooling fan working state. | Check whether it overload. Tighten screw. Check whether cooling fan is dirty or stall rotate. |
| Motor | Check if there is abnormal vibration or noise. | Tighten machine and electric connection and lubricate the machine components. |
| Load | Check whether output current is over the rated value of the motor or the inverter and has lasted for a period. | Make sure whether it overload and whether the machine model is right. |

● Periodic overhaul

Under normal state, one overhaul every 3 or 4 months is ok. Please confirm the actual overhaul period according to the machine use condition and work circumstance while using the machine.

| Items | Checking content | Treatment |
|---|---|---|
| Whole | Check insulated resistance;<br>Check circumstance. | Tighten and change bad component;<br>Clear and improve circumstance. |
| Electric connection | ● Check whether the wire and connector color changes, whether there is disrepair, crack color change or aging in insulated layer.<br>● Check whether the connect terminals are frayed, damaged or loose.<br>● Earth checking. | ● Change bad wires.<br>● Fasten terminals and change bad terminals.<br>● Measure earth resistance and fasten earth terminals. |
| Mechanical connection | ● Check if there is abnormal vibration or noise or something is loose. | ●Tighten, lubricate and change the bad components. |
| semi-conductive component | ● Check whether there is dust or rubbish.<br>● If there is obvious out change | ● Clean operation environment<br>● Change damaged component |
| Electrolytic capacitor | ● Whether there is liquid leak, color change or crack. Whether the safety valve outcrop, inflation, creak or liquid leak. | ● Change damaged component |
| Peripheral equipment | ● Peripheral equipment outlook and insulation checking. | ● Clear and change damaged component. |
| PCB | ● Peculiar smell color change, bad rust and connector checking. | ● Fasten connector<br>● Clear PCB |

| | | |
|---|---|---|
| Cooling system | ● Check whether the fan is damaged or blocked up.<br>● Whether rubbish and dust is stuck to the heatsink . | ●Clean operation environment<br>● Change damaged component |
| Keyboard | ● Whether it is damaged. Check whether display is complete. | ● Change damaged component |
| Motor | ● Check if there is abnormal vibration or noise. | ● Tighten machine and electric connection and lubricate the machine components. |

Notice:Do not operate in the state of power supply, othewise there is danger of electric shock. When you perform relevant opration, please turn off the power and confirm that the main circuit DC voltage has declined to the security level. Perform relevant operation after 5 minutes.

## 5.2 Maintenance

All equipments and components have useful life. Right maintenance can prolong the lifetime. But it cannot avoid damage. Please change the components before their lifetime over.

| Component | Useful lifetime |
|---|---|
| Fan | 2~3year |
| Electrolytic capacitor | 4~5 year |
| PCB | 8~10 year |

The replacement of the other components has strict requirements on maintenance technology and product familiarity. And they can not be used without strict detection after replacement. So we suggest the user not to replace the other inner components. If they need to change indeed, please contact to the dealer or the sales department of manufacture company.

# Appendix: Modbus Communication Protocol

● Communication Frame Structure

Communication data format is as follows:

The byte composition: Including initiation bit, 8 data bit, check bit and stop bit.

| Initiation Bit | Bit1 | Bit2 | Bit3 | Bit4 | Bit5 | Bit6 | Bit7 | Bit8 | Check bit | Stop bit |
|---|---|---|---|---|---|---|---|---|---|---|

One frame message must be transmitted as a continued data flow, and if there is a interval over 1.5 byte before ending, the receiving equipment will clear the half-baked information. And the next byte will be considered as the address field of a new frame. Similarly, if the interval between a new frame start-up and the former frame is smaller than 3.5 byte time, the receiving equipment will consider that it is the continuation of former one frame. Since the jumbled frame, the final CRC checking value is incorrect, which would lead to the communication mistake.

● Communication Control Parameter Group Address Specification:

| Function Specification | Address Definition | Data Meaning Specification | | | R/W Characteristic |
|---|---|---|---|---|---|
| Communication Given Frequency | 0x3000 or 0x2000 | 0～60,000 is corresponding to 0.00Hz～600.00Hz | | | W/R |
| Communication Command Setting | 0x3001 or 0x2001 | 0000H: No order | | | W/R |
| | | 0001H: FWD running | | | |
| | | 0002H: REV running | | | |
| | | 0003H: FWD jog | | | |
| | | 0004H: REV jog | | | |
| | | 0005H: DEC stop | | | |
| | | 0006H: free stop | | | |
| | | 0007H: malfunction reset | | | |
| | | 0008H: Running banned command | | | |
| | | 0009H: Running allowed command | | | |
| State of Inverter | 0x3002 or 0x2002 | Bit0 | 0: stop | 1:running | R |
| | | Bit1 | 0:non-acc state | 1: ACC | |
| | | Bit2 | 0:non-dec state | 1: DEC | |
| | | Bit3 | 0: Forward | 1: REV | |
| | | Bit4 | 0: normal | 1: fault | |
| | | Bit5 | 0: GPRS unlocked | 1:GPRS locked | |
| | | Bit6 | 0: no pre- alarm | 1: pre alarm | |
| Frequency Inverter Fault Code | 0x3003 or 0x2003 | current inverter fault code(refer to fault code table) | | | R |
| Communication Given Upper Frequency | 0x3004 or 0x2004 | 0～32000is corresponding to 0.00Hz～320.00Hz | | | W/R |
| Communication Torque Setting | 0x3005 or 0x2005 | 0～1000 is corresponding to 0.0～100.0% | | | W/R |
| The FWD Max Frequency limit in Torque Control | 0x3006 or 0x2006 | 0～1000 is corresponding to 0.0～100.0% | | | W/R |
| The REV Max Frequency limit in Torque Control | 0x3007 or 0x2007 | 0～1000 is corresponding to 0.0～100.0% | | | W/R |
| Communication Given PID Setting | 0x3008 or 0x2008 | 0～1000 is corresponding to 0.0～100.0% | | | W/R |
| Communication Given PID Feedback | 0x3009 or 0x2009 | 0～1000 is corresponding to 0.0～100.0% | | | W/R |

| | | | |
|---|---|---|---|
| Voltage Frequency separation voltage value setting | 0x300A or 0x200A | 0～1000 is corresponding to 0.0～100.0% | W/R |
| Fault and pre- alarm code reading | 0x3010 or 0x2010 | 0-63 is the fault code<br>64- is the pre alarm code | R |
| Output terminal state | 0x3010 or 0x2010 | External borrowing inverter output terminal<br>BII0 -- Y<br>BIT1 -- TA1-TB1-TC1;<br>BIT2 -- TA2-TB2-TC2 | W |
| AO output | 0x3021 or 0x2021 | 0-1000 corresponds output 0-10V,0-20mA | R |

Note: The other function code addresses refer to "Communication Address "of function code table. While using writing command (06 H), if the highest digit of parameter function code address domain is 0, it only write in the RAM of inverter, and on storage when power off; if the high half digit of parameter function code address is 1, it write in EEPROM, which means power off storage. For instance, F0 parameter group: 0X00XX (RAM); 0X10XX (EEPROM)

● List of fault code meanings for abnormal response information from salve machine:

| Fault Code | Meanings |
|---|---|
| 1 | Order code fault |
| 3 | CRC checking fault |
| 4 | Illegal address |
| 5 | Illegal data |
| 6 | Unable to modify when running |
| 8 | Inverter busy(EEPROM is storing) |
| 9 | Value over limit |
| 10 | Reserved parameters can't be modify |
| 11 | Number of Bytes wrong when reading |

VEICHI

# Warranty Card

**Profile**

User Name：_____

Address：_____

Contacts：_____ Phone：_____ Fax：_____

Model：_____ Machine Code：_____

**Agent/Distributor Profile**

Delivery Company：_____

Contacts：_____ Phone：_____ Delivery Date：_____

## Warranty Clauses

The Company solemnly states that since the day users purchase from my company (hereinafter referred to as manufacturer),they can enjoy the following warranty services;

1.Since the date of purchase, users can enjoy the following warranty services of the product:

1) Within 30 days after shipment,the company promises returning,replacement and maintenance of the product.
2) Within 90 days after shipment,the company promises replacement and maintenance of the product.
3) Within 18 months after shipment,the company promises only maintenance of the product.
4) Products exported to countries except China shall not enjoy the warranties mentioned above.

2. Since the date of purchase, users can enjoy the service of the company when they pay for the service.

3. Exception Clauses: Product failures caused by the following reasons would not enjoy the free warranty services of the manufacturer:

1) Failures caused by operations of users that is not operated in accordance with the requirements of the product manual;
2) Failures caused when users repair or renovate the product without communicating with the manufacturer in advance;
3) Failures caused by abnormal aging of the product resulted from poor using environment;
4) Failures caused by earthquake, fire or other natural disasters or abnormal voltage;
5) Failures caused by damage during transportation(mode of transportation is decided by users and the company only helps to handle cargo shipment procedures).

4. In the following conditions, the manufacturer have the right not to provide warranty services:

1) When the marks,trademarks or nameplates of the products are destroyed or can not be identified;
2) When users do not pay for the product according to signed contract;
3) When users intentionally hiding the improper operations during installation, wiring and maintenance;

5. For products that enjoy all returning,replacement and maintenance services, first the product should be returned to the company and after responsibility confirmation,the product can be replaced or repaired.

## Certificate of Approval

QC check：VEICHI PASS OQC

The product has been checked and proved to be qualified for delivery in conformity with standard.